CASKS SYSTEM DEVELOPMENT PROGRAM

WILLIAM H. LAKE
TRANSPORTATION BRANCH
OFFICE OF CIVILIAN RADIOACTIVE WASTE MANAGEMENT

NUCLEAR WASTE TECHNICAL REVIEW BOARD
TRANSPORTATION & SYSTEMS PANEL MEETING
SEPTEMBER 25, 1991
ARLINGTON, VA

OCRWM CASK DEVELOPMENT APPROACH

- NRC CERTIFICATION (DESIGN TO CURRENT NRC STANDARDS AND PRACTICES)
- EXTENSIVE USE OF ENGINEERING TESTS TO DEVELOP DESIGN DATA
- DESIGN VERIFICATION TESTS USING SCALE MODELS
- BROAD TECHNICAL ISSUES RESOLVED INDEPENDENT OF CASK DESIGN EFFORTS

UPDATE ON THE CASK PROGRAM

- TWO FULLY FUNDED CONTRACTS ARE PROCEEDING THROUGH FINAL DESIGN
  - LEGAL-WEIGHT TRUCK - GENERAL ATOMICS
  - TRAIL/BARGE - BABCOCK AND WILCOX
- TWO PARTIALLY FUNDED CONTRACTS CONCENTRATING ON SPECIFIC CASK DESIGN FEATURES
  - LEGAL-WEIGHT TRUCK - WESTINGHOUSE
  - RAIL/BARGE - NUCLEAR ASSURANCE CORP

FACTORS CONTRIBUTING TO HIGH CAPACITIES OF OCRWM CASK DESIGNS

- COOLING TIME (GA AND B&W)
- BURN-UP CREDIT FOR PWR FUEL (GA AND B&W)
- SQUARE CROSS SECTION (GA)
- DEPLETED URANIUM GAMMA SHIELD (GA)
- SEPARATE CASK BODIES FOR PWR AND BWR FUEL (GA)
- ALUMINUM HONEYCOMB IMPACT LIMITERS (GA)

THE GA LEGAL WEIGHT TRUCK CASK DESIGN

- GA-4 DESIGNED TO HOLD 4 PWR ASSEMBLIES AND GA-9 DESIGNED TO HOLD 9 BWR ASSEMBLIES
- STAINLESS STEEL STRUCTURES SQUARE CROSS SECTION
- DEPLETED URANIUM FOR GAMMA SHIELDING
- SOLID BORATED POLYMER FOR NEUTRON SHIELDING
- ALUMINUM HONEYCOMB IMPACT LIMITER
- STAINLESS STEEL FUEL SUPPORT STRUCTURE (FSS)
- B_4C IN FSS FOR CRITICALITY CONTROL
- BURN-UP CREDIT FOR CRITICALITY CONTROL OF PWR SNF

GA-4 LEGAL WEIGHT TRUCK SHIPPING CASK

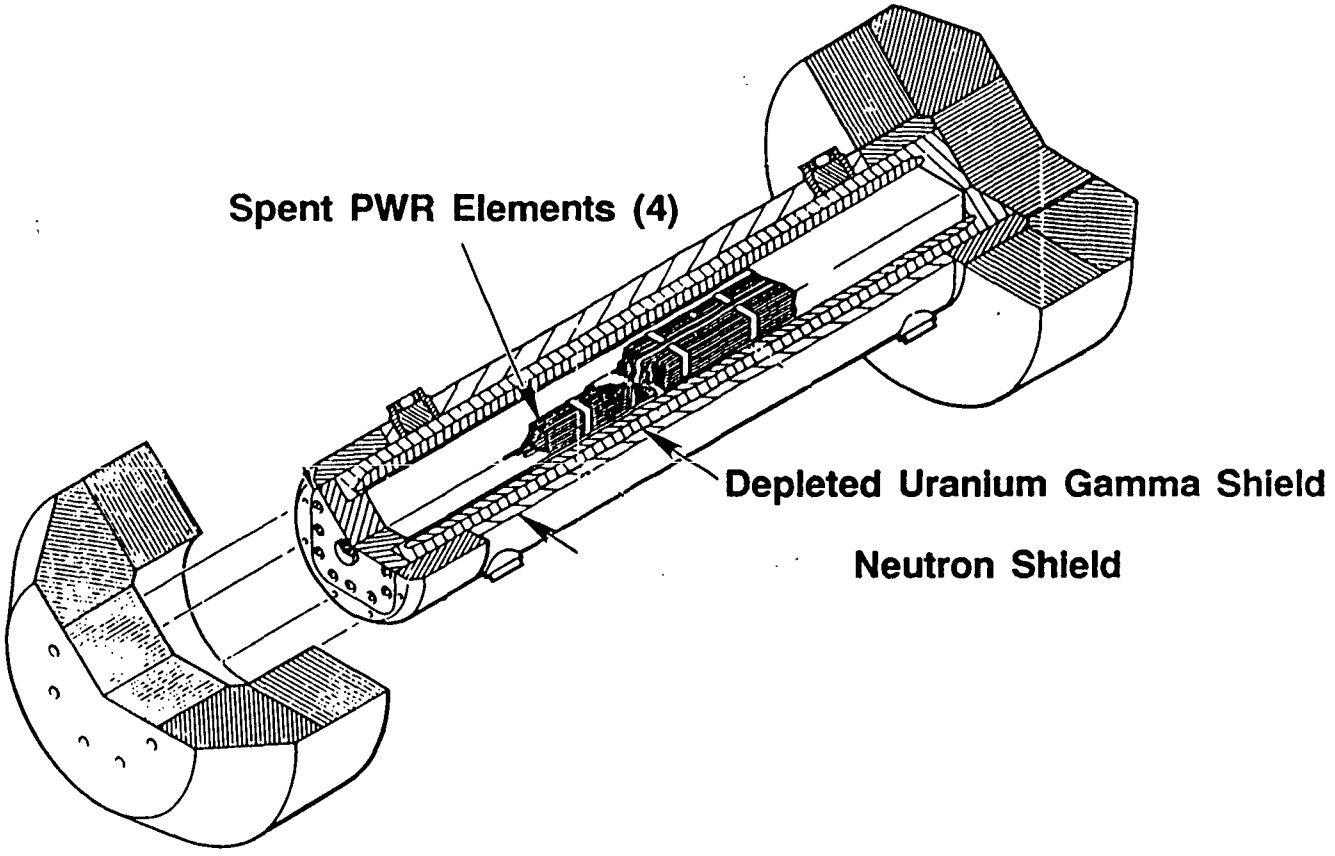

GA-9 LEGAL WEIGHT TRUCK SHIPPING CASK

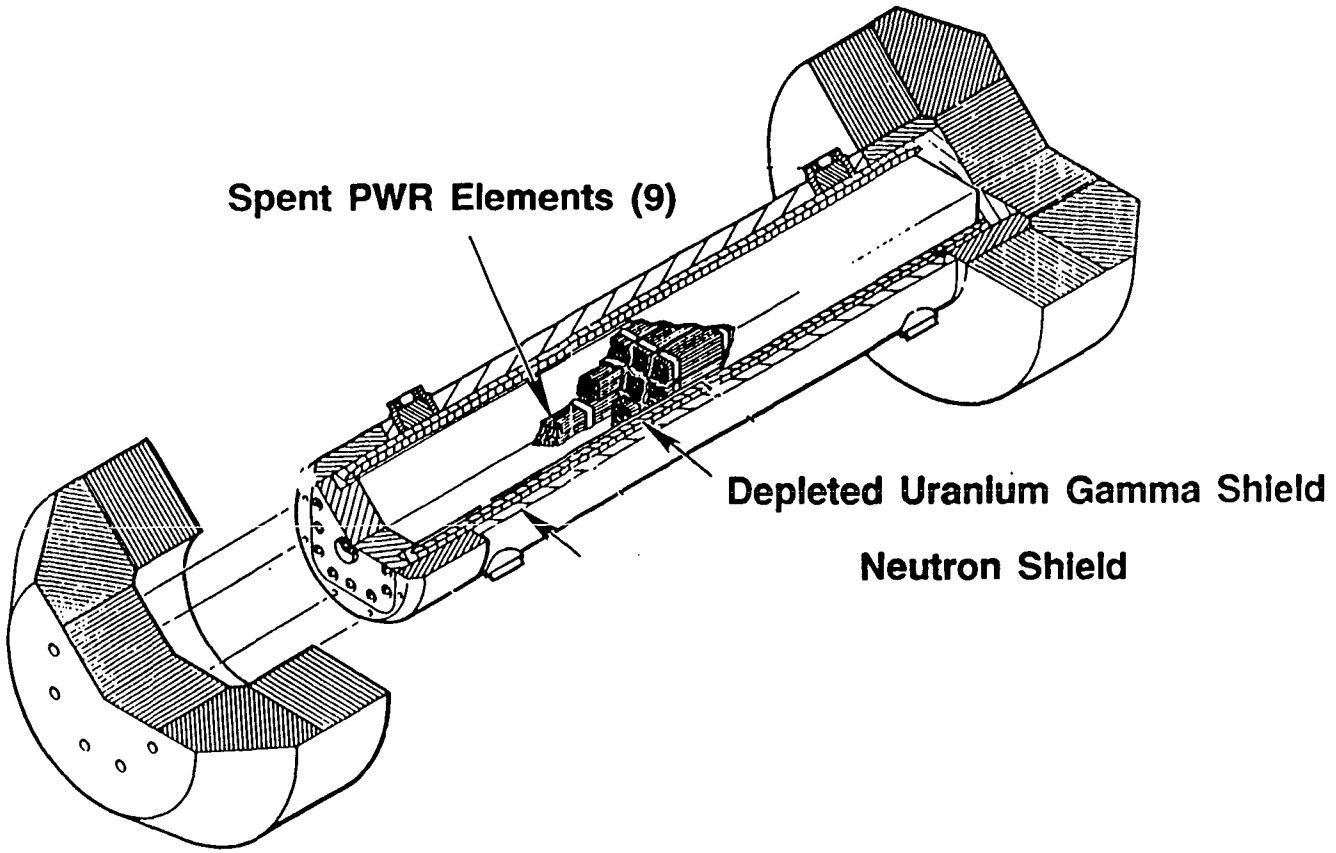

GA-4 AND GA-9 ROUNDED-SQUARE CROSS SECTIONS

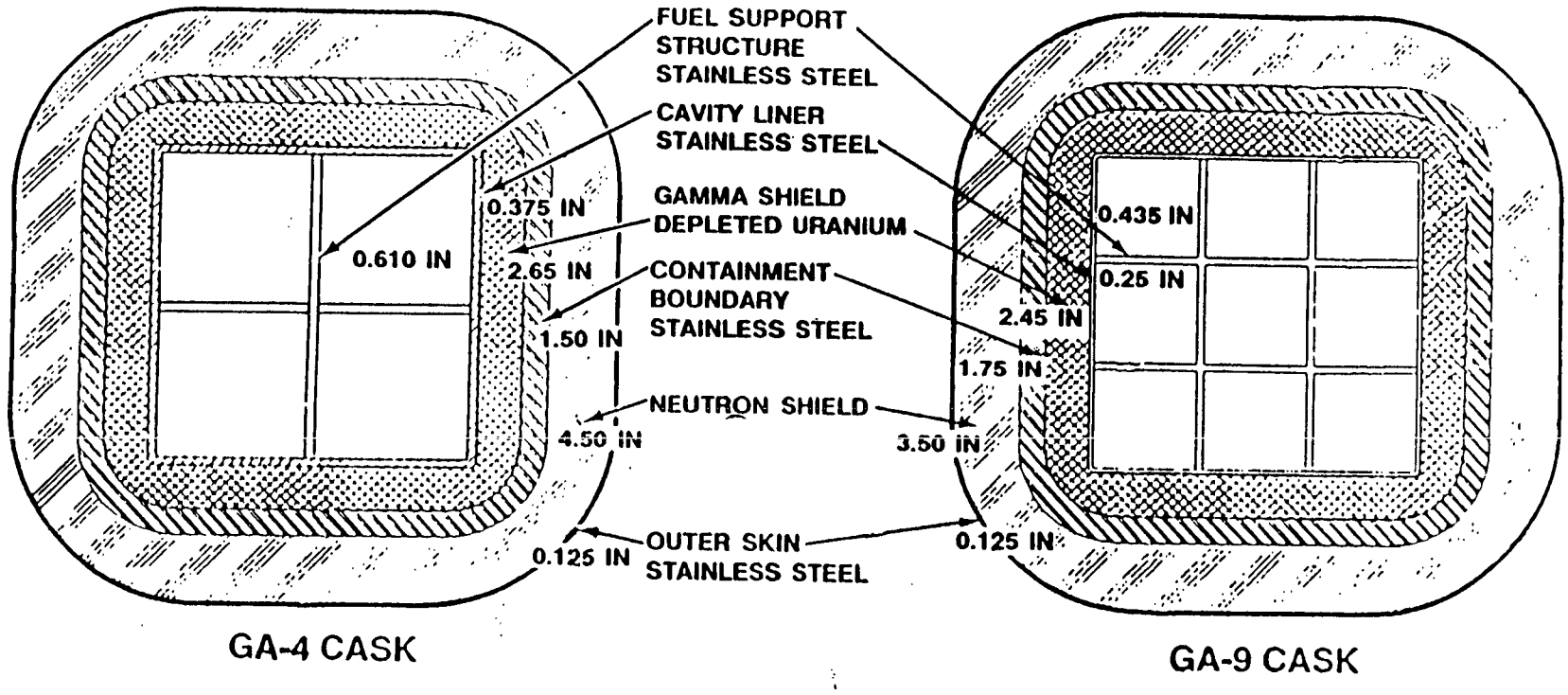

GA-4 CASK

GA-9 CASK

MAJOR MILESTONES FOR CSDP

FROM-REACTOR CASKS

GENERAL ATOMICS	DATE
• ISSUE PRELIMINARY DESIGN REPORT	4/90
• ISSUE FINAL DESIGN REPORT	1/92
• COMPLETE SCALE MODEL	8/92
• COMPLETE DESIGN VERIFICATION TESTS	10/92
• SARP & APPLICATION TO NRC	5/92
• NRC APPROVAL EXPECTED	5/94

BABCOCK & WILCOX CASK DESIGN

- CAPACITY OF 21 PWR ASSEMBLIES OR 52 BWR ASSEMBLIES
- CIRCULAR CROSS SECTION
- LEAD FOR GAMMA SHIELDING
- BORATED CONCRETE NEUTRON SHIELD
- CASK BODY STAINLESS STEEL
- FUEL BASKET DESIGN STAINLESS STEEL/COPPER/BORAL
- BALSA WOOD IMPACT LIMITERS
- BURN-UP CREDIT FOR CRITICALITY CONTROL OF PWR SNF

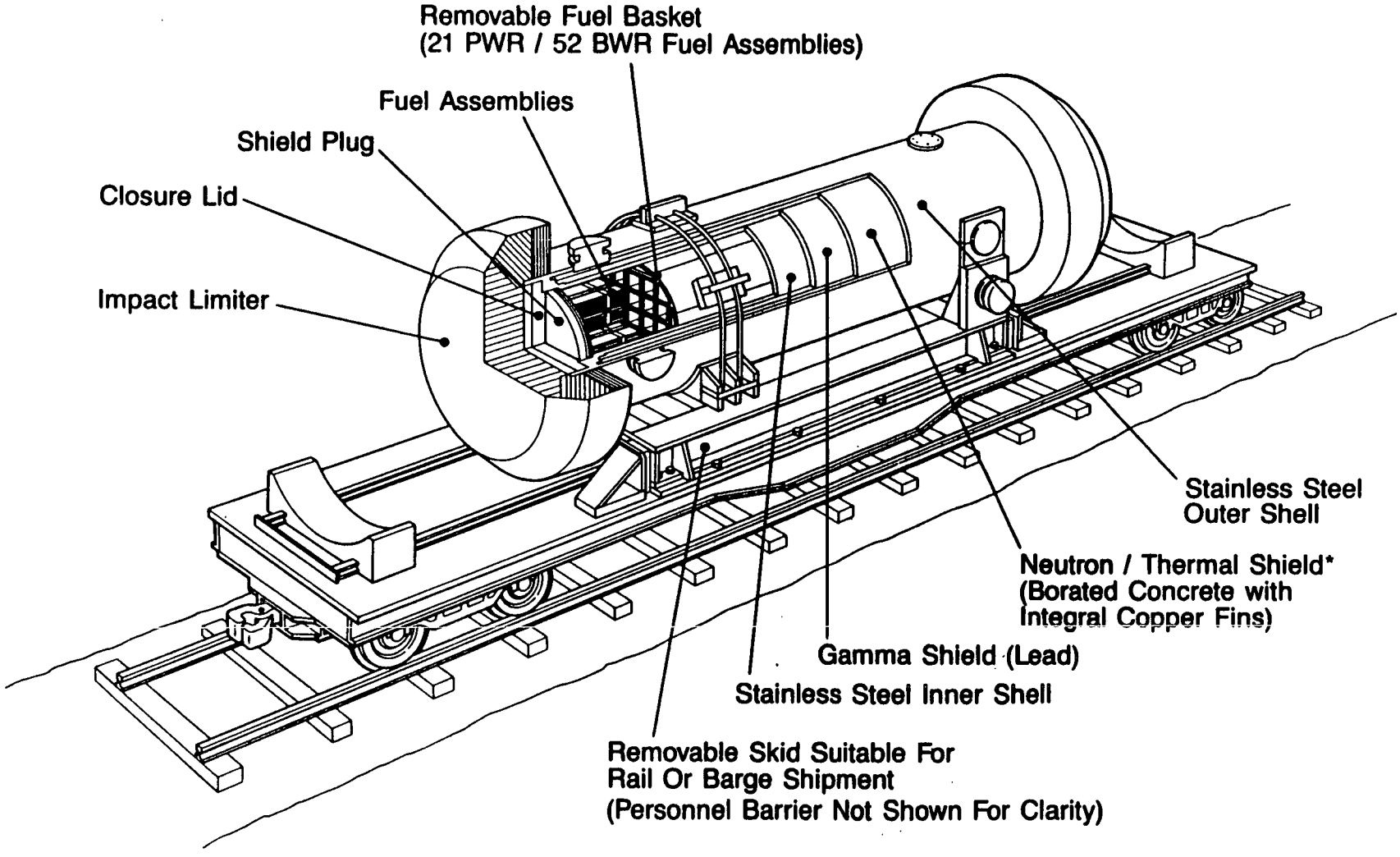

*Patented by ROBATEL SA

Fig. 3. Babcock & Wilcox Br-100 100 Ton Rail/Barge Cask.

BR-100 INTERCHANGEABLE BASKETS

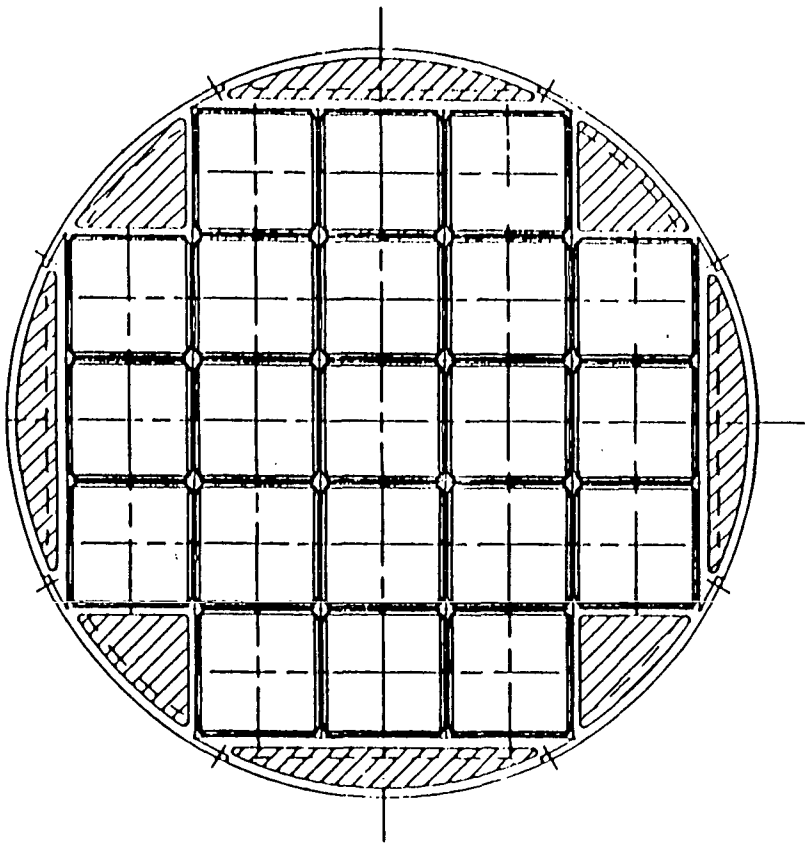

21 PWR

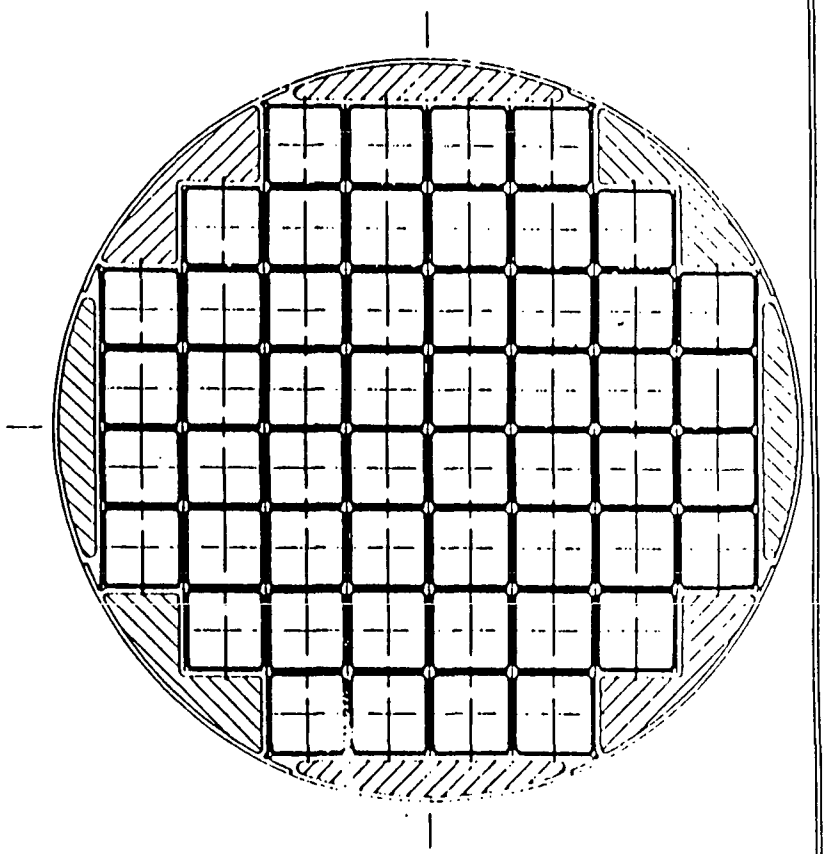

52 BWR

BR-100 MULTILAYER CASK WALL

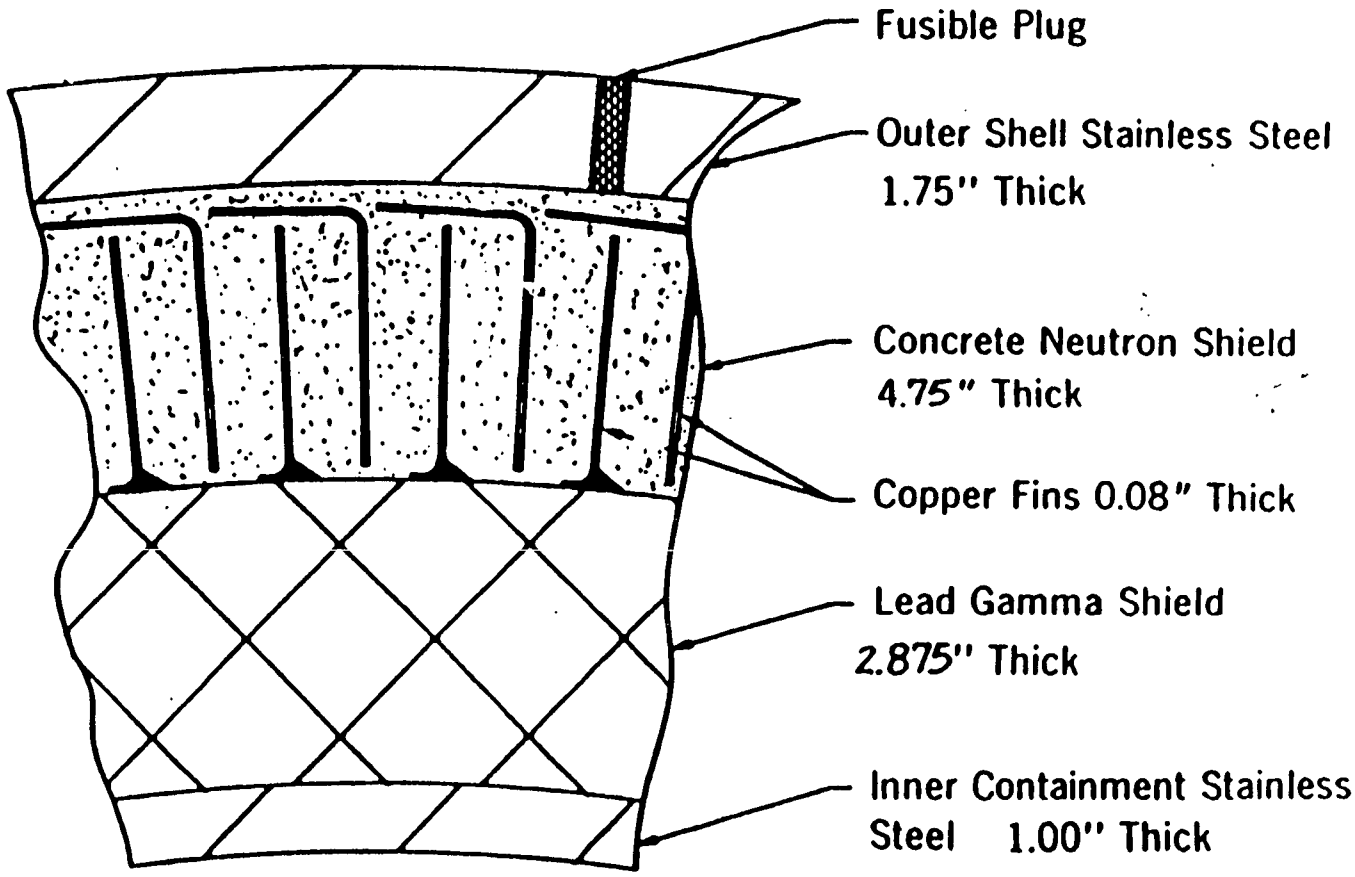

MAJOR MILESTONES FOR CSDP

FROM-REACTOR CASKS

BABCOCK & WILCOX	DATE
• ISSUE PRELIMINARY DESIGN REPORT	2/90
• ISSUE FINAL DESIGN REPORT	2/92
• COMPLETE SCALE MODEL	12/91
• COMPLETE DESIGN VERIFICATION TESTS	3/92
• SARP & APPLICATION TO NRC	8/92
• NRC APPROVAL EXPECTED	6/92

CONSIDERATION OF SPECIFIC CASK DESIGN FEATURES BY PARTIALLY FUNDED CONTRACTORS

- CONTRACTOR ACTIVITIES TO FOCUS ON SPECIFIC TECHNICAL/REGULATORY ISSUES

- WESTINGHOUSE - PURSUE ACCEPTABILITY OF GRADE 9 TITANIUM ALLOY FOR USE IN CASK STRUCTURAL DESIGN

  - ASME APPROVAL THROUGH DESIGN CODE

  - NRC APPROVAL

- NUCLEAR ASSURANCE CORPORATION - DEMONSTRATE ADEQUACY OF WEDGE-LOC CLOSURE DESIGN

TECHNICAL ISSUES RESOLUTION

- BURN-UP CREDIT
- SOURCE TERM EVALUATION
- CLOSURE SEAL PERFORMANCE TESTS
- WEEPING/SURFACE CONTAMINATION

BURN-UP CREDIT

- ACCOUNT FOR REDUCED REACTIVITY OF SPENT FUEL
- REDUCES THE NEED FOR COMPLEX BASKET DESIGNS WITH EXTERNAL CRITICALITY CONTROL
- CONTRIBUTES TO INCREASED CASK CAPACITY
- REQUIRES MODIFICATION OF CURRENT ANALYSIS METHODS
- REQUIRES ADDITIONAL VERIFICATION OF LOADING PROCEDURES

SOURCE TERM EVALUATION

- DEVELOP A CONSISTENT AND TECHNICALLY DEFENSIBLE APPROACH TO DEMONSTRATING ADEQUATE CONTAINMENT FOR SNF CASKS
- IDENTIFY CONTRIBUTORS TO SOURCE TERM
- CHARACTERIZE SOURCE TERM CONTRIBUTORS
- DEVELOP RELEASE MODELS AND ANALYTIC APPROACHES FOR SOURCE TERM/CASK SYSTEMS
- VERIFY MODELS AND ANALYSIS METHODS

CLOSURE SEAL PERFORMANCE

- DETERMINE SEAL BEHAVIOR AND FAILURE MECHANISM FOR TRANSPORT ENVIRONMENTS
- ESTABLISH CRITERIA AND METHODS FOR CASK SEAL DESIGN
- VERIFY PERFORMANCE OF CLOSURE DESIGN FOR OCRWM CASKS

WEEPING/SURFACE CONTAMINATION

- WEEPING RESULTS IN REMOVABLE CONTAMINATION THAT EXCEEDS REGULATORY LIMITS
- WEEPING IS A SURFACE PHENOMENON
- INVESTIGATE ROOT CAUSE OF WEEPING
- DEVELOP PRACTICAL DESIGN APPROACHES FOR PREVENTION AND MITIGATION
- DEVELOP PRACTICAL EFFICIENT CORRECTIVE APPROACHES FOR CASKS EXHIBITING WEEPING