An Overview of Pre-Closure Ventilation Options

A presentation to
United States Nuclear Waste Technical Review Board
Las Vegas, Nevada. October 1991

Antony Ivan Smith-Tunneling Technolgy Corporation.
Dr. Gary Sandquist-Director of Nuclear Engineering,
University of Utah.

Ventilation Requirements

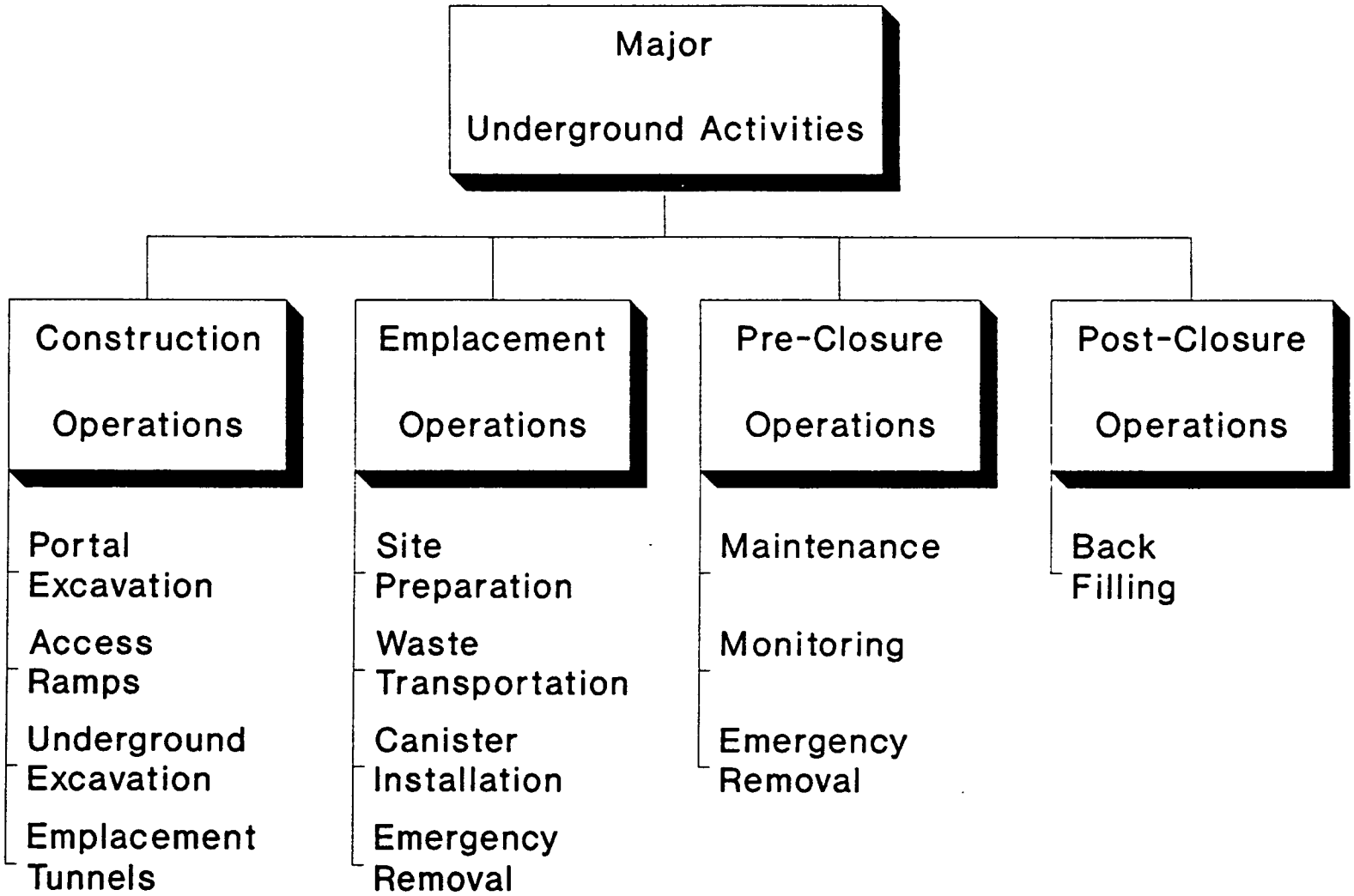

Fig.002

Heat Sources

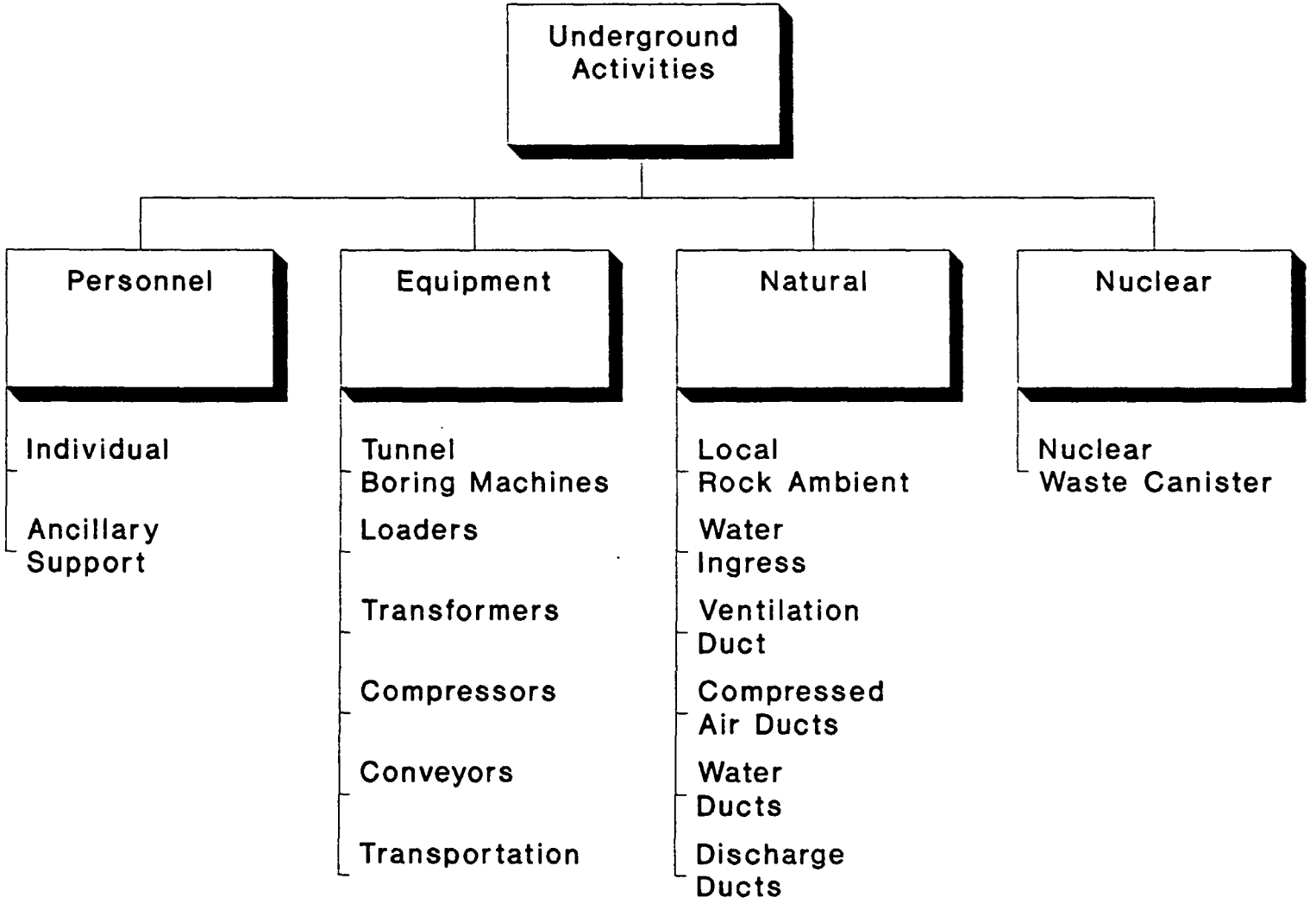

Fig.003

Construction Operations

Minimum System Requirements

Description	Projected Units	Air Volume
Personnel	200 cfm * 150 men	30,000 cfm
Equipment, Diesel	100 cfm * 1000 HP	100,000 cfm
Tunnels	at 60 ft/min	
22 foot Main Tunnels		44,000 cfm
18 foot Emplacement		15.000 cfm
		15,000 cfm
		15,000 cfm
		15,000 cfm
		15,000 cfm
		15,000 cfm
	Total Minimum	264,000 cfm

Federal Register CFR-30

Fig.004

An Example of Ventilation Requirements
for Underground Operations

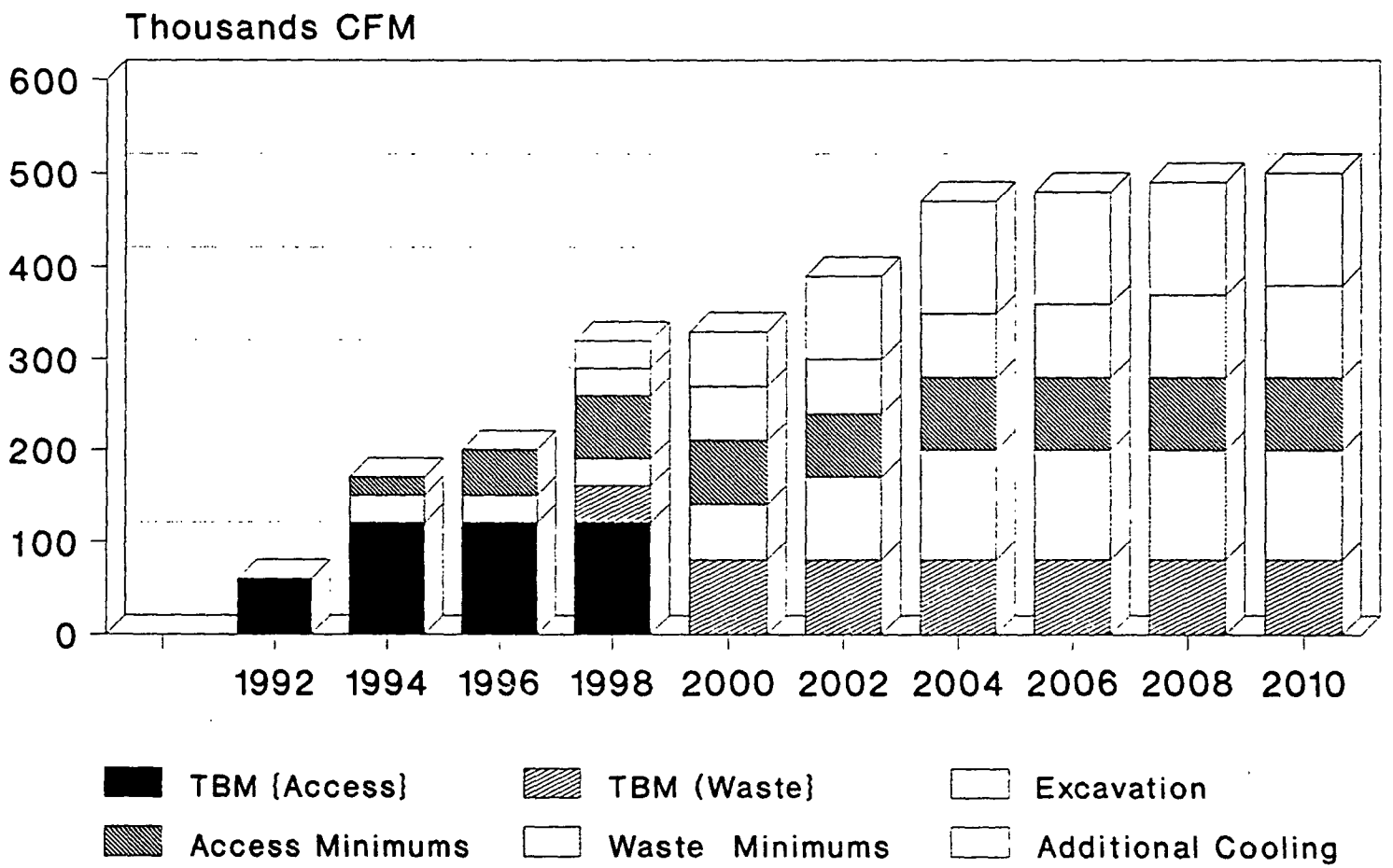

Fig.05

Typical TBM Bored Tunnel

18 to 22 foot

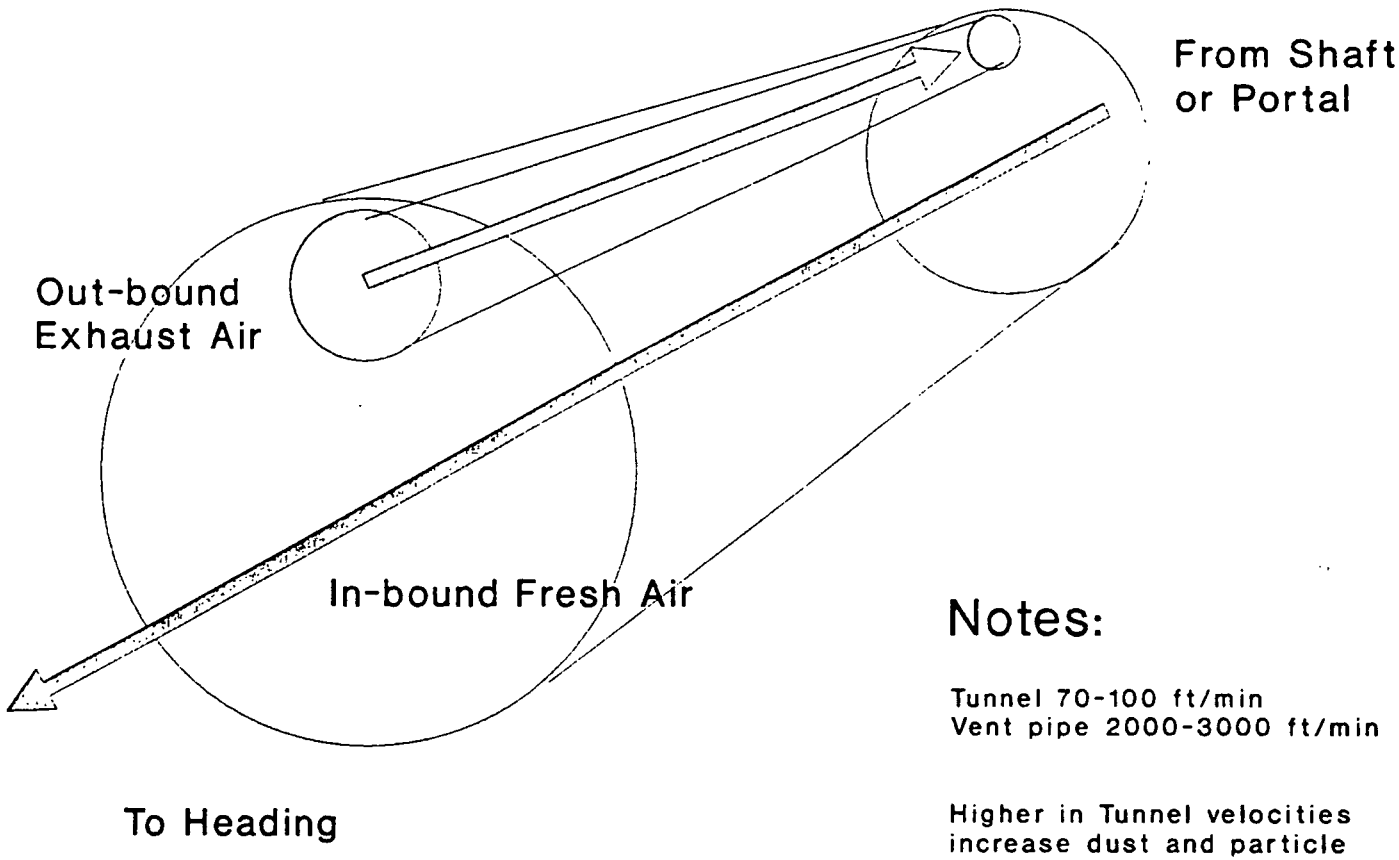

Notes:

Tunnel 70-100 ft/min
Vent pipe 2000-3000 ft/min

Higher in Tunnel velocities increase dust and particle problems.

Heat from the vent tube is passed back to in-bound air.

Fig.06

Alternate Concept
Separate Ventilation Tunnel

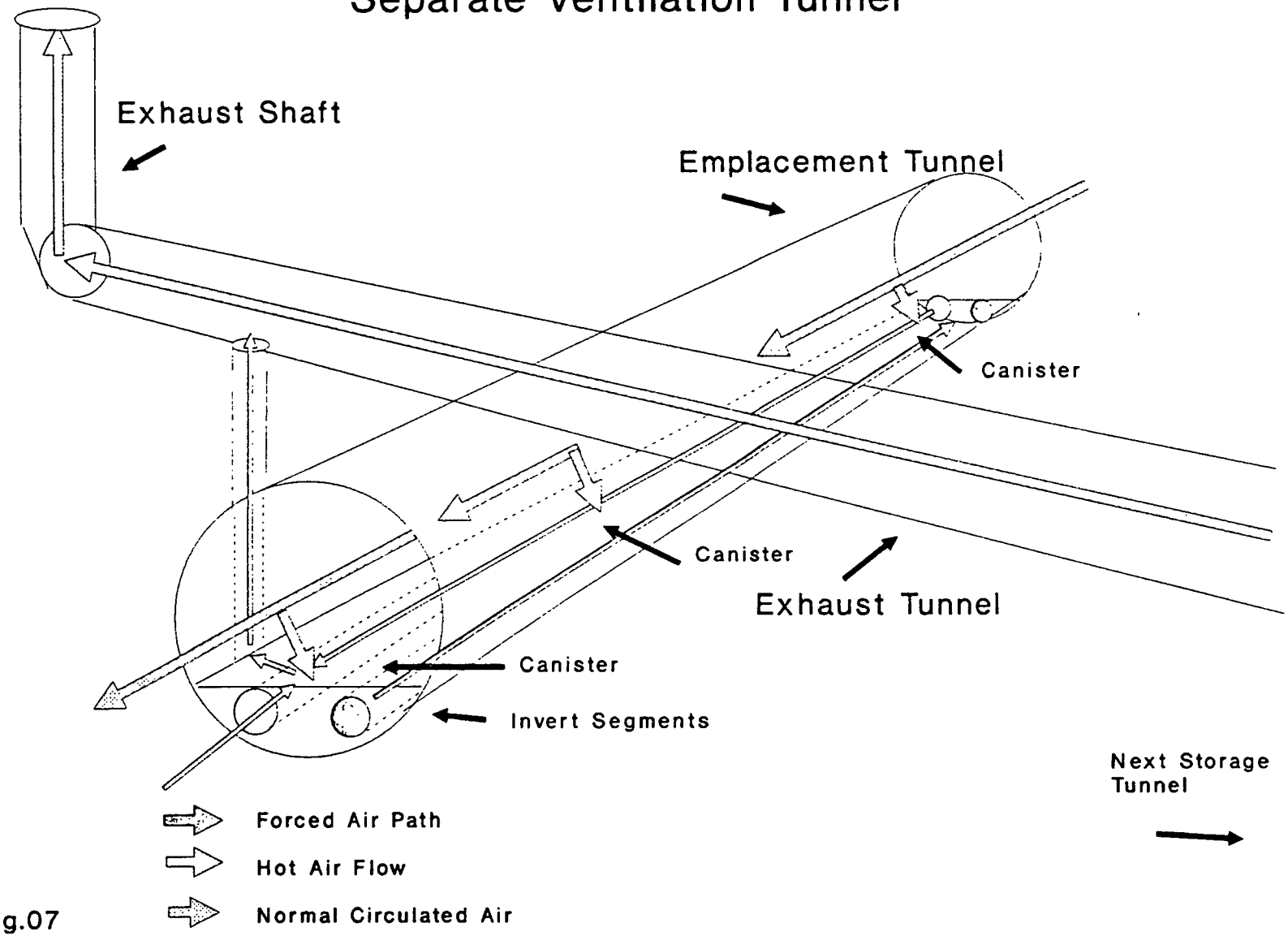

Fig.07

An Overview of Pre-Closure Ventilation Options.

by Antony Ivan Smith and Gary M. Sandquist

Abstract.

The ventilation requirements of a nuclear waste repository represent a most critical aspect of it's operation. The major phases of activities can be considered as construction, emplacement, pre-closure with monitored storage and post-closure with retrieval or final burial. Current scenarios of design have not carefully integrated the ventilation systems to these specific phases of operations. Certain gross assumptions have been made both in terms of concept and performance even though critical areas of safety for both environmental and potential hazard have been outlined. Appropriate ventilation concepts can mitigate many of these operational and environmental concerns. It is also apparent that advanced concepts might also allow for larger portions of the expressed heat loads to be economically removed from the repository entirely. This paper is dedicated to presenting an overview of these options.

Introduction

Any proposed repository for high level nuclear wastes requires the utilization of advanced concepts in planning, engineering and construction activities. The needs for the long term storage and retrieval of nuclear material demands a careful interaction of theoretical and practical skills. The current conceptual design of the repository has now divorced itself in the most part from the traditional drill and shoot methodology of construction. In the proposed concepts of mechanically excavated tunnels for access and storage by Tunnel Boring Machines, the ventilation systems must employ the practical reality of current technology. This requirement is most apparent in the interface and integration between construction, emplacement, maintenance and storage phases in the ventilation of the repository. Appropriate and adequate ventilation is the very lifeblood of a nuclear waste repository during all phases of its operations.

The figure, Ventilation Requirements (Fig 02), represents the major phases or activities associated with the underground environment. Each activity has unique ventilation demands that have to be melded and integrated into the overall system. No effort has been made to address in any detail a significant and very particular requirement of the NRC (60.133g), -the separation of emplacement and construction activities-. This requirement is quite important in terms of the final design and ultimate performance of this system and can be more easily addressed if a dual ventilation system is employed.

The complexity of activities and their associated differing ventilation requirements is not akin to what is normally found in a mining environment. The parameters of design and projected performance requirements are more related to what would be found within a large, complex building

structure. It is quite apparent that the Heating and Ventilation Engineer has an extremely significant role in developing a system that meets the requirements of this unique environment.

Heat Sources

There are numerous sources of heat that have to be accommodated by the ventilation system. Figure (Fig 03) Heat Sources, indicates the major areas associated with the underground activities. What is of keen interest is the very negative effect of these sources in raising the ambient of the repository. Great care has to be taken to select the method of cooling of mechanical equipment, electric motors, diesel powered equipment, compressors etc. This selection is integral to the ventilation concepts since any reduction of heat into the underground environment is very beneficial in the overall design of the ventilation system.

There are though sources of heat that are typically underestimated. A Tunnel Boring Machine of 1000 horsepower returns more heat to the underground atmosphere than what is typically calculated at 10-15%. A much larger portion, possibly in excess of 50% of the applied power, ends up as heat and is radiated into the return air. Most of this excess heat is developed from friction with the rock and is passed back into the structure of the machine. Once again there is a further complexity in terms of the integrating mechanical equipment into the underground environment.

It is quite apparent that the overall efficiency of the repository can be enhanced if considerable care and attention is applied to the containment and removal of heat. In any further studies these sources of heat need to be carefully classified and included as an integral part of a ventilation design.

Nuclear Waste Storage

The major source of heat after the initial construction phases will be emitted from the nuclear material. The core aspect of the present repository design is the passive nature of the concept. This philosophy for storage, allows for the retention of the nuclear material in sealed canisters, buried vertically at approximately 5 meter intervals in the invert of about 1000 meter long storage tunnels. The quite moderate emitted heat, 3.5 KW per canister, is passed to and accumulated into the surrounding rock. The overall density of the buried material buried in these tunnels and stored in this passive un-cooled state, can allow for extremely high temperatures to be amassed; temperatures in excess of 100 degree Centigrade. Potentially negative effects in terms of personnel safety and to the underground environment could arise and be attributed to the extremely high heat loads.

Environmental

The environmental problem areas associated with the high heat loads are oriented in the common area of ventilation and cooling. Other sources of heat from construction and emplacement activities also can contribute to the overall heat loads. Personnel safety can be compromised in both the emplacement phase and more critically in any potential retrieval stage. The emergency removal of a canister in a heat stabilized tunnel might prove to be the penultimate challenge for man and machinery. Within this scenario the integral ventilation system currently proposed may not be able to accommodate the extraction of high heat loads into the airstream without endangering other areas of the repository. This situation in particular might occur with any attempt to blast cool a stabilized storage tunnel. In the new scenarios for construction, the approximate doubling in length of the storage tunnels modifies significantly the ventilation concepts that were originally developed for the drill and blast options.

Modified Cooling Methods

Numerous proposals have been outlined in an effort to improve the thermal transfer of heat from the canisters. A significant example is demonstrated by the installation of radially drilled heat pipes to further distribute the thermal load from around the canisters into the surrounding rock. Concepts such as these add significant costs

to construction as well as adding the potential of risky, inspection, repair or maintenance procedures in case of failure. They also might further complicate any normal or emergency retrieval of nuclear material from the tunnel invert.

Basic Ventilation

It would appear that the proposed ventilation system has followed the traditional concepts associated with a mining environment; utilizing the tunnels and ramps for combined access and ventilation. A significant change has now been in the original design. Originally short emplacement drifts connected to perimeter drifts, that in turn connected with the exhaust shaft. In the new scenarios storage tunnels as long as 3.0 km have been proposed to gain further economy from the use of Tunnel Boring Machines. It is now quite apparent the very particular ventilation requirements associated with the TBM has to considered and integrated as well into the new overall scenario.

The figure -Construction Operations- (Fig 04), demonstrates a critical aspect of the ventilation system requirements. In this case the value of 60 ft./min has been taken from the highest enforced federal minimum requirement 30 CFR-75-301-4. In practise in the industry minimum velocities of over 60 ft./min are normally found. In this example some other assumptions have been made in terms of tunnel diameters etc. It does though represent an approximation of the requirements of the access ramps and tunnels and in three pairs of storage tunnels; it also clearly indicates a breakdown of these activities into minimum requirements. The values are quite significant since 264,000 cfm does not take into account the requirements for dust control and cooling in actual construction operations. In actuality while in the construction phase the air requirement would nearly double, raising the figure to about 338,000 cfm as a minimum for this hypothetical case.

This example also demonstrates a critical factor in terms of overall velocity of the air. If all of this air was exhausted through a single shaft and system of a similiar diameter, velocities in excess of 1,000 ft./min would result. High air velocities during the construction phases in active tunnels would create additional problems. The most significant is keeping particulates in the air and also due to the interference of equipment etc., travelling or placed in the tunnels, extremely high velocities can occur, stripping material from conveyors belts and material loading points.

The following figure -An Example of Ventilation Requirements- (Fig 05) further indicates the integration of underground activities into their respective ventilation requirements. It should be clearly stated that this case represents a hypothetical situation for demonstration. Assumptions have been made for the best case of 22 foot diameter access tunnels and 18.5 foot diameter storage tunnels. An approximation of development and other activities has also been included. What is most interesting to note is the significance of the base minimums for the tunnels themselves. As the dimension of the repository grows so this base minimum would become, in essence, the ventilation overhead. A very critical figure. The figure does though indicate quite clearly the potentially higher ventilation demand in the primary construction phases for the TBM access ramps and tunnels. As this phase draws to a close the construction activity for the storage tunnels would make a major demand for ventilation.

What is quite imperative in any further studies that each ventilation component of the a repository be broken down to the most basic level. These two figure are quite indicative of the need for a very concise and accurate data base of ventilation components. The complexity of ventilation requirements for a repository is such that it becomes one of the most critical aspect of its operation. In any further study or design to utilize ventilation as a primary function for heat removal from the waste storage tunnels the identification and classification of these components is of the first order.

Current Concepts.

The current scenarios for excavation of a nuclear waste repository are oriented to the use of Tunnel Boring Machines as the primary means. The Tunnel Boring Machine has particular requisites that have not been clearly included in prior studies. The TBM adds a much higher heat load to the

construction environment than is normally estimated. To further add to this complexity is the need for dust removal not only at the machine itself but throughout the ancillary equipment, conveyors loading points etc. The figure -Typical TBM Bored Tunnel- (Fig 06), indicates the rather simple but efficient method. A rather significant aspect of this concept is the rather efficient heat transfer from the metal ventilation duct bask to the in-bound air. The overall effect on long tunnel drives is to raise the overall ambient within the system that is most noted in the work zones at the face. What is also a critical factor is that the velocity of the in-bound fresh air cannot be allowed to exceed some rather un-scientific and arbitrarily set values. High tunnel velocities will strip material from conveyors and equipment as well as making the conditions for underground personnel quite difficult to work. These conditions are somewhat established from the design of the Tunnel Boring Machines, the material handling method and associated underground equipment.

What would appear to be the most serious concern within all phases of the repository is the fact that the storage construction activities will continue for some time. These activities will also require the continuous removal of excavated material; if dual purpose access tunnels and ramps are employed air velocities become quite critical in the overall design. Since at the current state of the art the most efficient means of material removal is a conveyor system, the in-bound air must be maintained at a value to prevent the contamination of the air by particulates. This value represents a major factor in the overall ventilation design.

Proposed Concepts

The figure -Alternate Concept- (Fig 07) indicates two major concepts, separate exhaust tunnel and storage tunnel ventilation system. This scenario offers some very distinct advantages in the overall system that needs to be considered in the development of the storage tunnels. In this hypothetical scenario concrete invert segments would be placed in the tunnel invert. A very common practise today. These interconnected segments would contain ducting to allow for contained air passages. If these passage on suction side are connected to the auxiliary exhaust tunnel a rather simplified and efficient system would exist. The basis of the concept, whatever the actual details are, is to place into a separate system as immediately as possible the heated air.

Some very distinct advantages become quite apparent:

- No heat transfer to incoming air.
- Much higher velocities are obtainable.
- A smaller diameter exploration tunnel could be bored.
- Separation of emplacement and construction activities.
- Removal of higher expressed heat loads.

Additional Scenario and Augmented Waste Cooling

What is also quite apparent that if this scenario is further addressed is the distinct possibility that a larger portion of the expressed heat load of the nuclear waste material could be evacuated efficiently. Modified design of the containment cask for the canisters to allow for more efficient convection would have to be included as a part of this concept. Any application of turbulent air around the cask itself would improve the heat transfer quite significantly from the current passive design. In actuality the most efficient means would be to place the cask horizontally in the invert segments allowing turbulent air to pass over augmented cooling structure into the exhaust system.

In the design of such a system the very simplicity of a ventilation system can be best employed. It is quite obvious that as a further understanding of the system requirements is developed augmented concepts should be considered.

Conclusions

This paper has attempted to address in general terms the overall ventilation options in a nuclear waste repository. In any attempt to develop options or concepts, such as augmented cooling, a clear understanding of the ventilation system as a whole has to be established.

Figure 8 identifies a few of these critical phases.

- Gross Bore Ventilation
  Heat Pipe and Augmented Cooling
- Canister Placement
- Dust and Particulate Control
- High Air Velocities in Access Tunnels
- Separation of Construction and Emplacement Zones
- Ventilation Shafts and Tunnels
- Detrimental Effects of Waste Tunnels

Ventilation is a most critical aspect in the overall design of a repository it also represents its very lifeblood in terms of its operation.

Biographies

Gary M. Sandquist. PH.D.,M.S.,B.S.
Professor of Mechanical Engineering at the University of Utah. Director of Nuclear Engineering. Registered Professional Engineer (UT, CA, MN). Fellow of American Nuclear Society ANS. Licensed Senior Reactor Operator (US,NRC) Nuclear Science Expert (United Nations-IAEA),

Antony Ivan Smith. M.S.,B.S.
Chairman Teca Inc. President Tunneling Technology Corporation. Consultant Sandia National Laboratories ESF.