U.S. DEPARTMENT OF ENERGY
OFFICE OF CIVILIAN RADIOACTIVE WASTE MANAGEMENT

PRESENTATION TO THE NUCLEAR WASTE TECHNICAL REVIEW BOARD

SUBJECT: REPOSITORY TESTING CONSIDERATIONS

PRESENTER: DR. THOMAS E. BLEJWAS

PRESENTER'S TITLE AND ORGANIZATION: TECHNICAL PROJECT OFFICER, SANDIA NATIONAL LABORATORY ALBUQUERQUE, NEW MEXICO

PRESENTER'S TELEPHONE NUMBER: (505) 844-9160

OCTOBER 8 - 10, 1991

U.S. DEPARTMENT OF ENERGY
OFFICE OF CIVILIAN RADIOACTIVE WASTE MANAGEMENT

PRESENTATION TO THE NUCLEAR WASTE TECHNICAL REVIEW BOARD

SUBJECT: REPOSITORY TESTING CONSIDERATIONS

PRESENTER: DR. THOMAS E. BLEJWAS

PRESENTER'S TITLE AND ORGANIZATION: TECHNICAL PROJECT OFFICER, SANDIA NATIONAL LABORATORY ALBUQUERQUE, NEW MEXICO

PRESENTER'S TELEPHONE NUMBER: (505) 844-9160

OCTOBER 8 - 10, 1991

Outline

- Potentially affected experiments
- Effects of lower/higher thermal loadings
- Conclusions

Potentially Affected Experiments

Field

- Heater experiments
- Heated block
- Thermal stress measurements
- Heated room experiment

Laboratory

- Thermal properties
- Thermal expansion
- Other temperature-dependent properties
- Other laboratory experiments

Typical Layout of Heater and Instrumentation

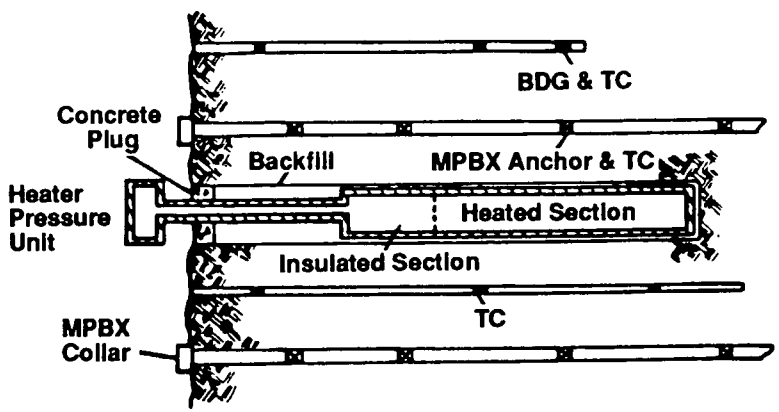

Section A - A

Typical Layout of Radon-Monitoring Borehole

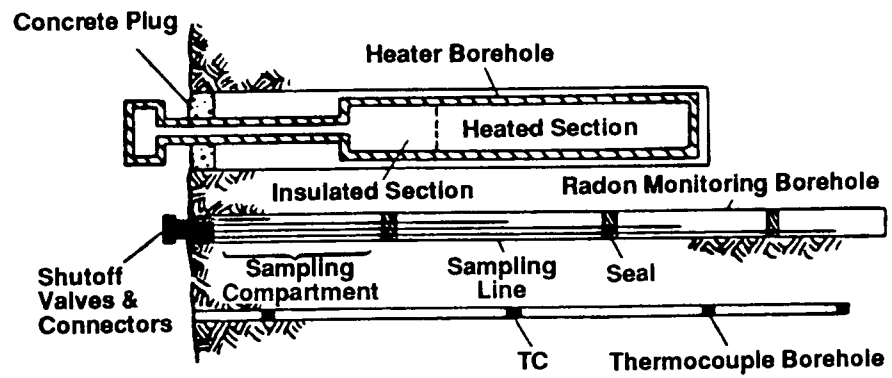

Section B - B

Axisymmetric Thermal Model

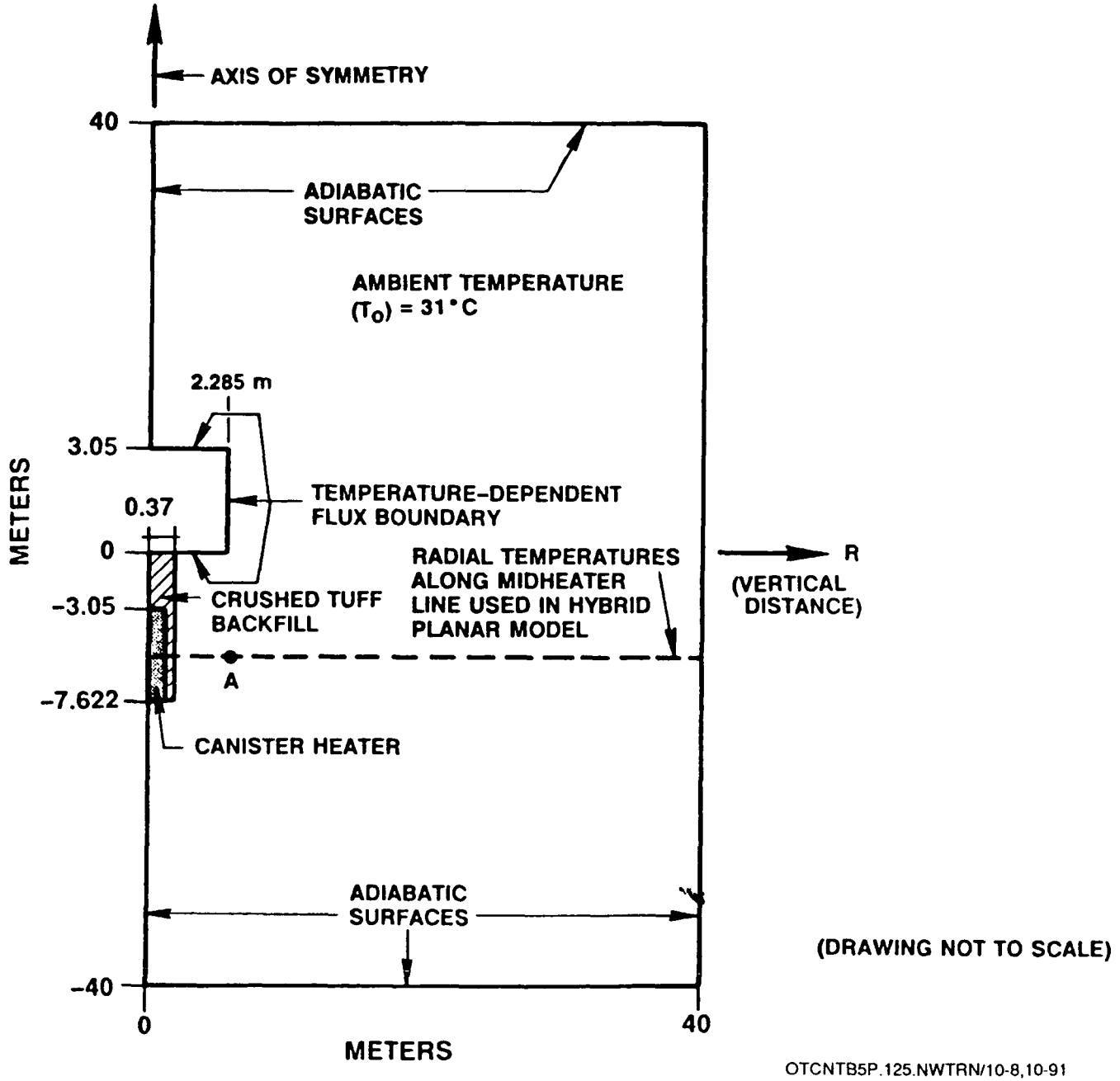

OTCNTB5P.125.NWTRN/10-8,10-91

Axial Temperature Profiles After 30 Mo of Heating for the Axisymmetric Model at Selected Radial Distances (R)

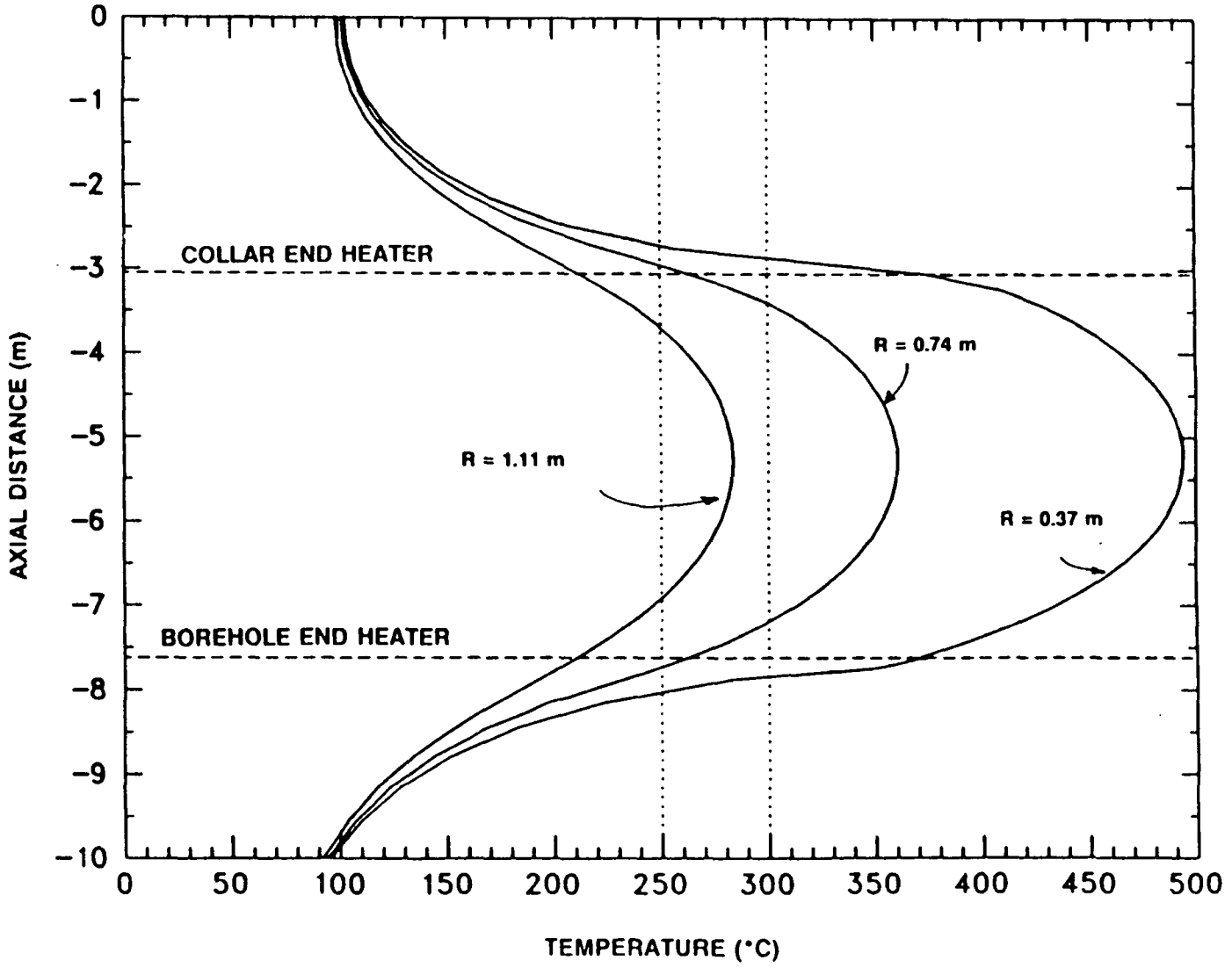

OTCNTB5P.125.NWTRN/10-8,10-91

Comparison of Measured and Calculated Temperature Profiles for the Welded Tuff Small-Diameter Heater Experiment

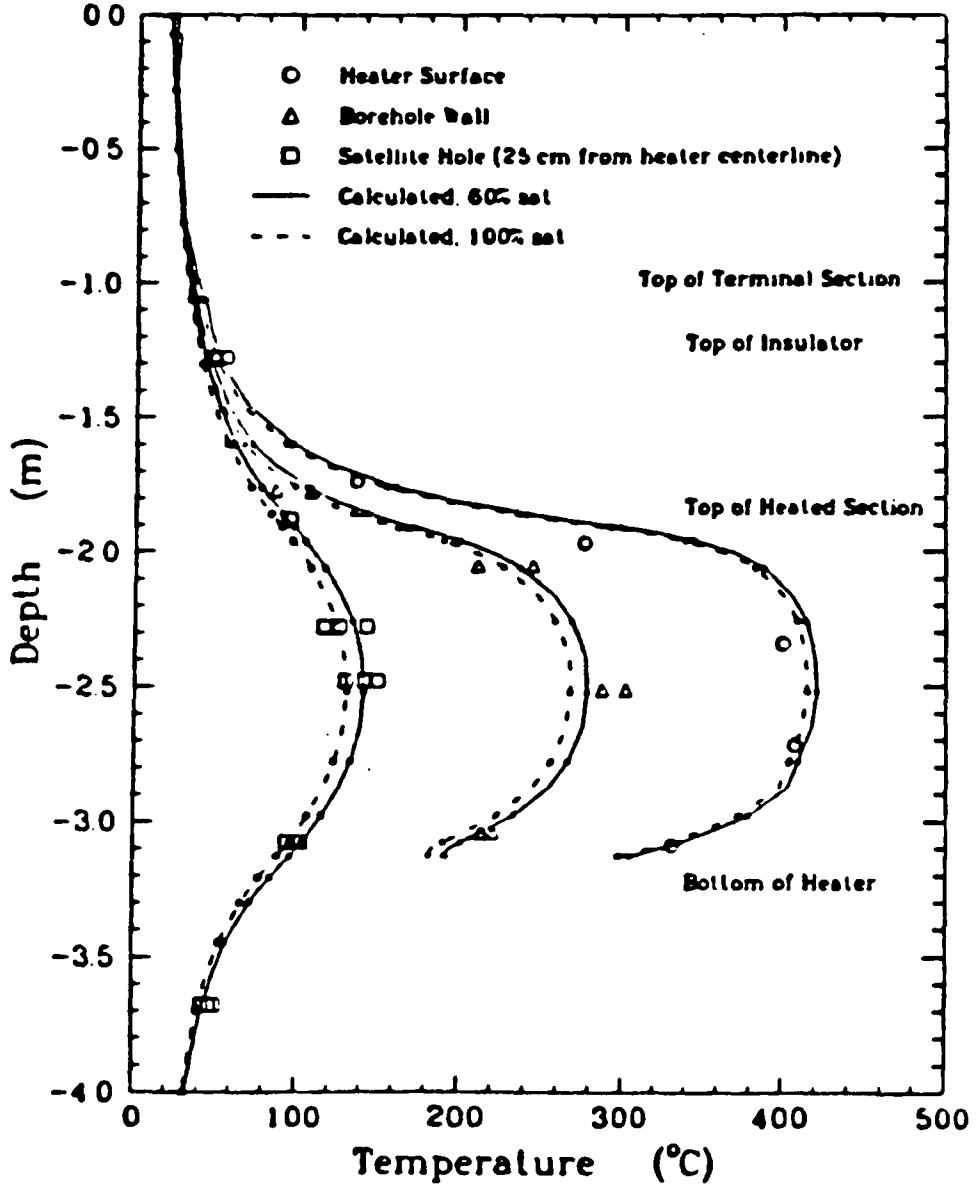

OTCNTB5P.125.NWTRN/10-8,10-91

G-Tunnel Heated Block Experiment

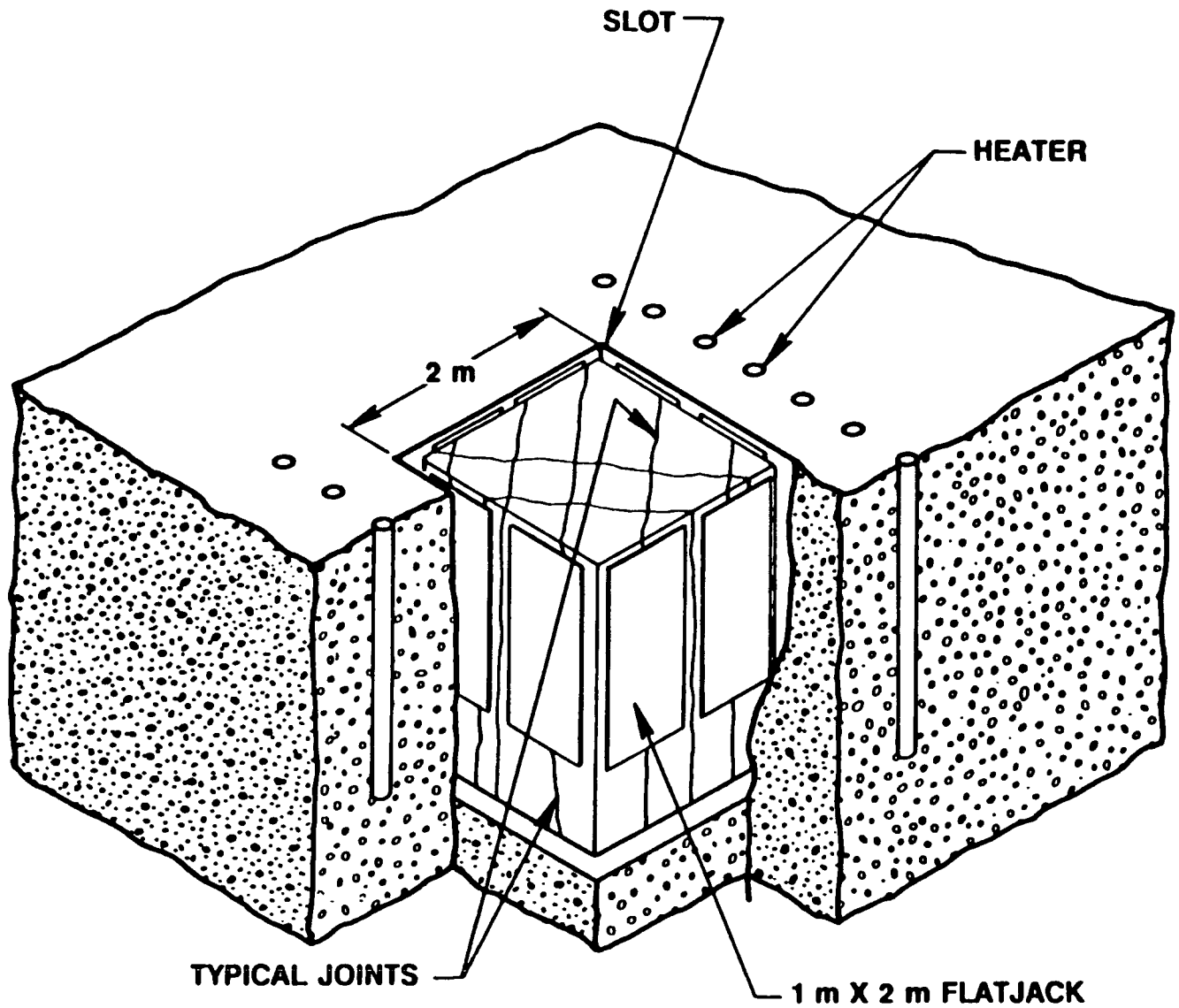

OTCNTB5P.125.NWTRN/10-8,10-91

Prototype Thermal Stress Test Layout: Section View

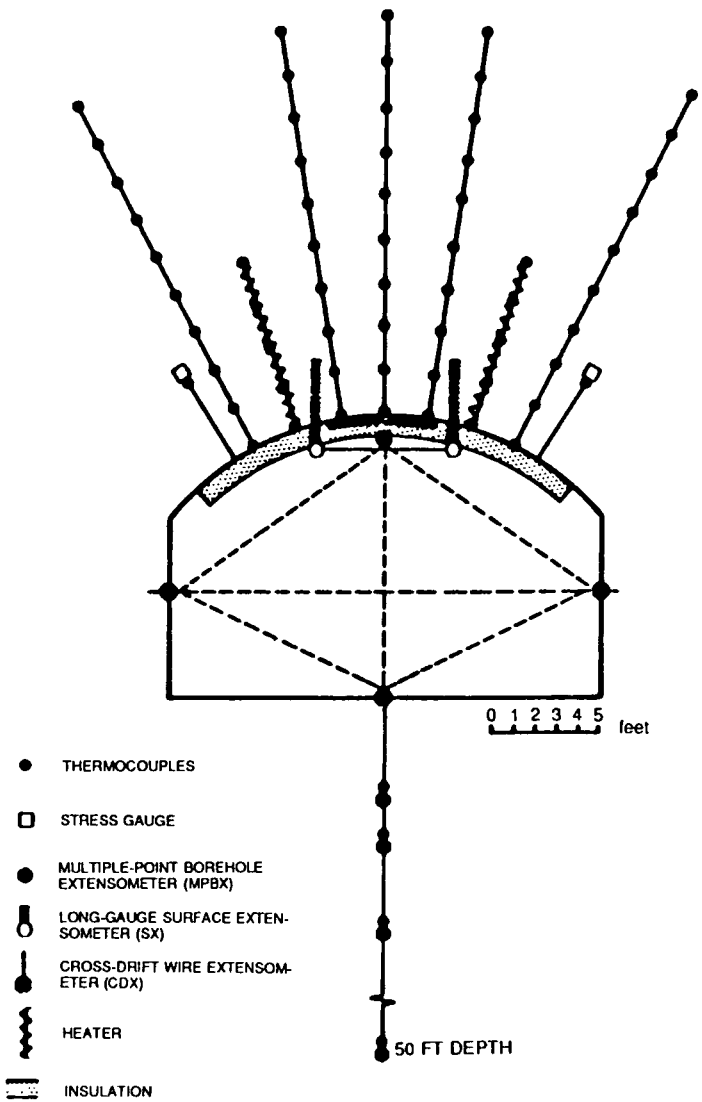

Prototype Thermal Stress Test Layout: Plan View

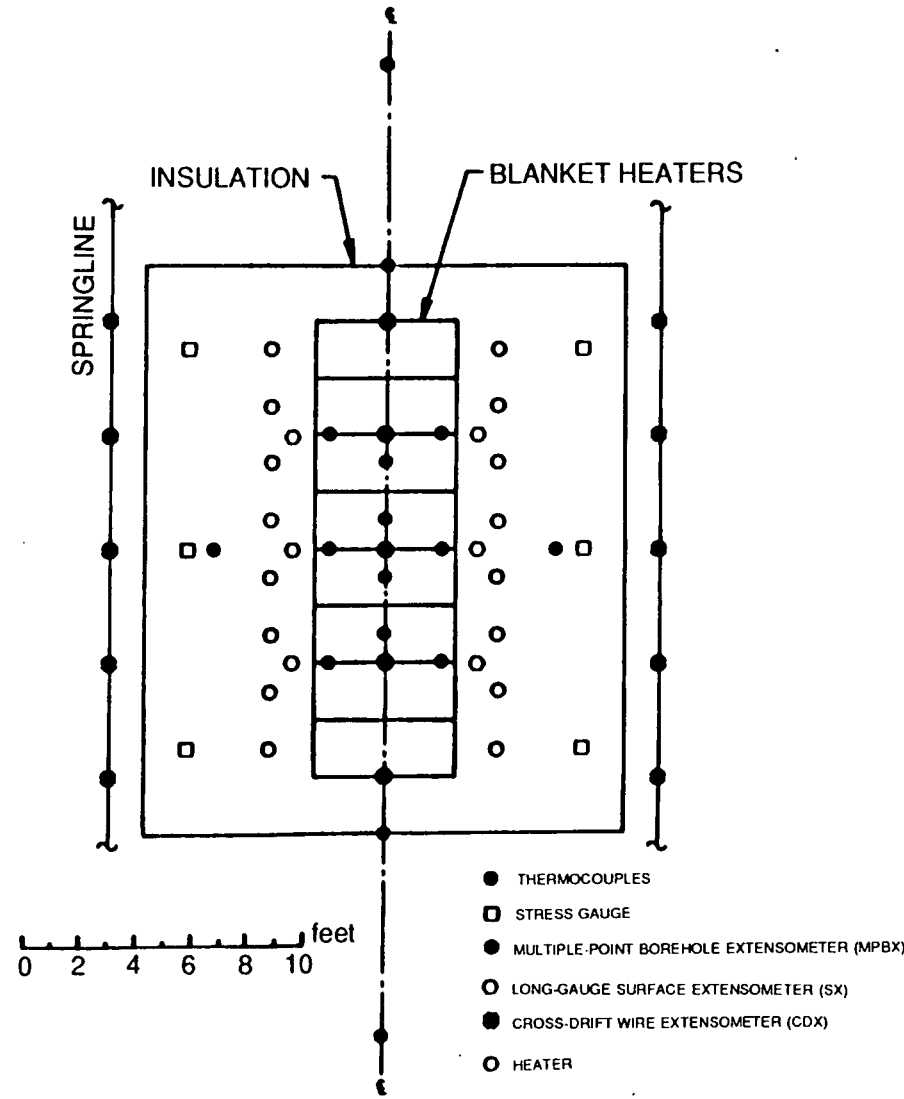

OTCNTB5P.125.NWTRN/10-8,10-91

Temperature Contours at 90 Days of Heating

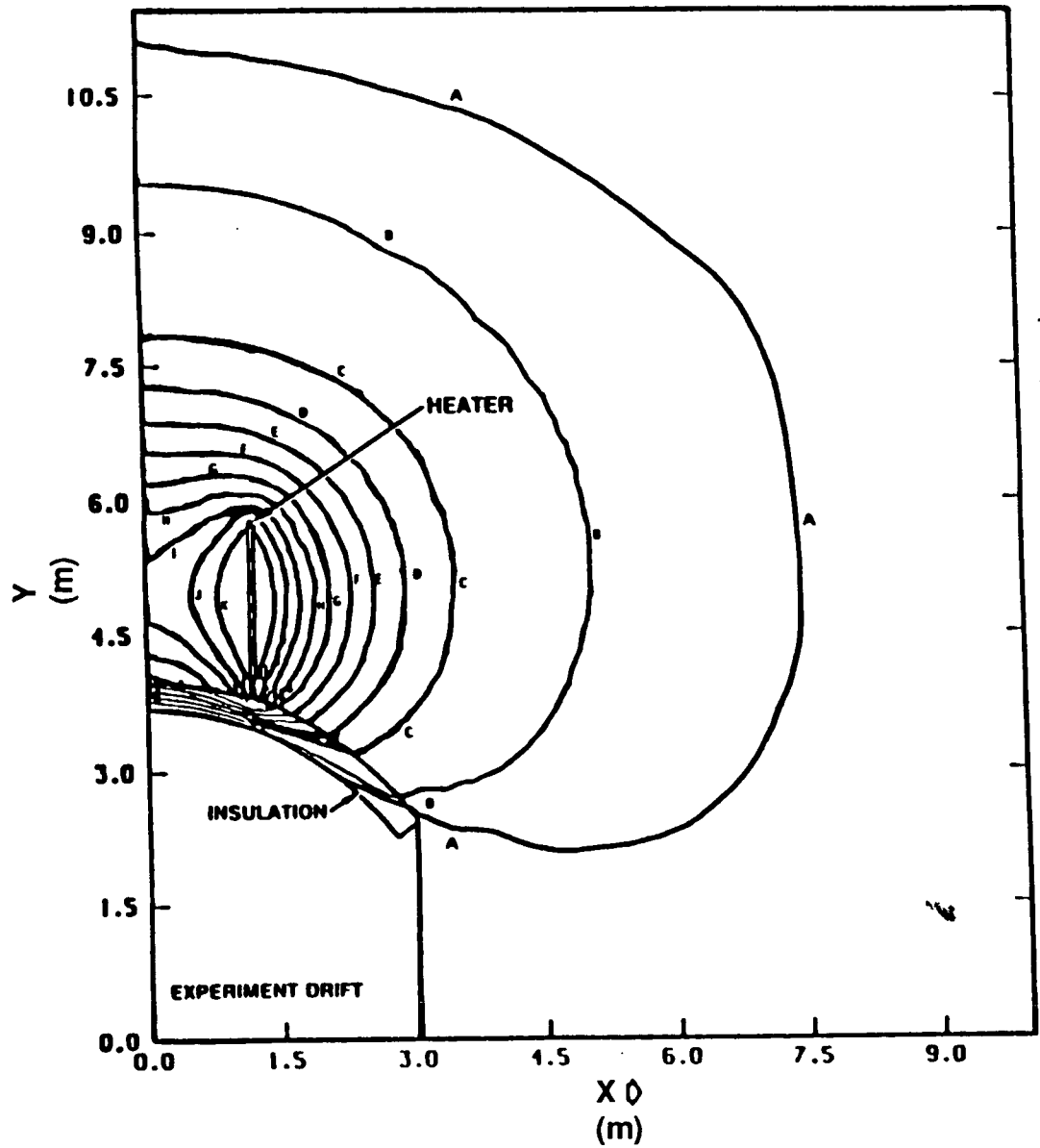

Temperature (°C)

A = 23
B = 40
C = 60
D = 120
E = 160
F = 200
G = 240
H = 280
I = 320
J = 360
K = 400

OTCNTB5P.125.NWTRN/10-8,10-91

Conceptual Arrangement of Heated Room Test

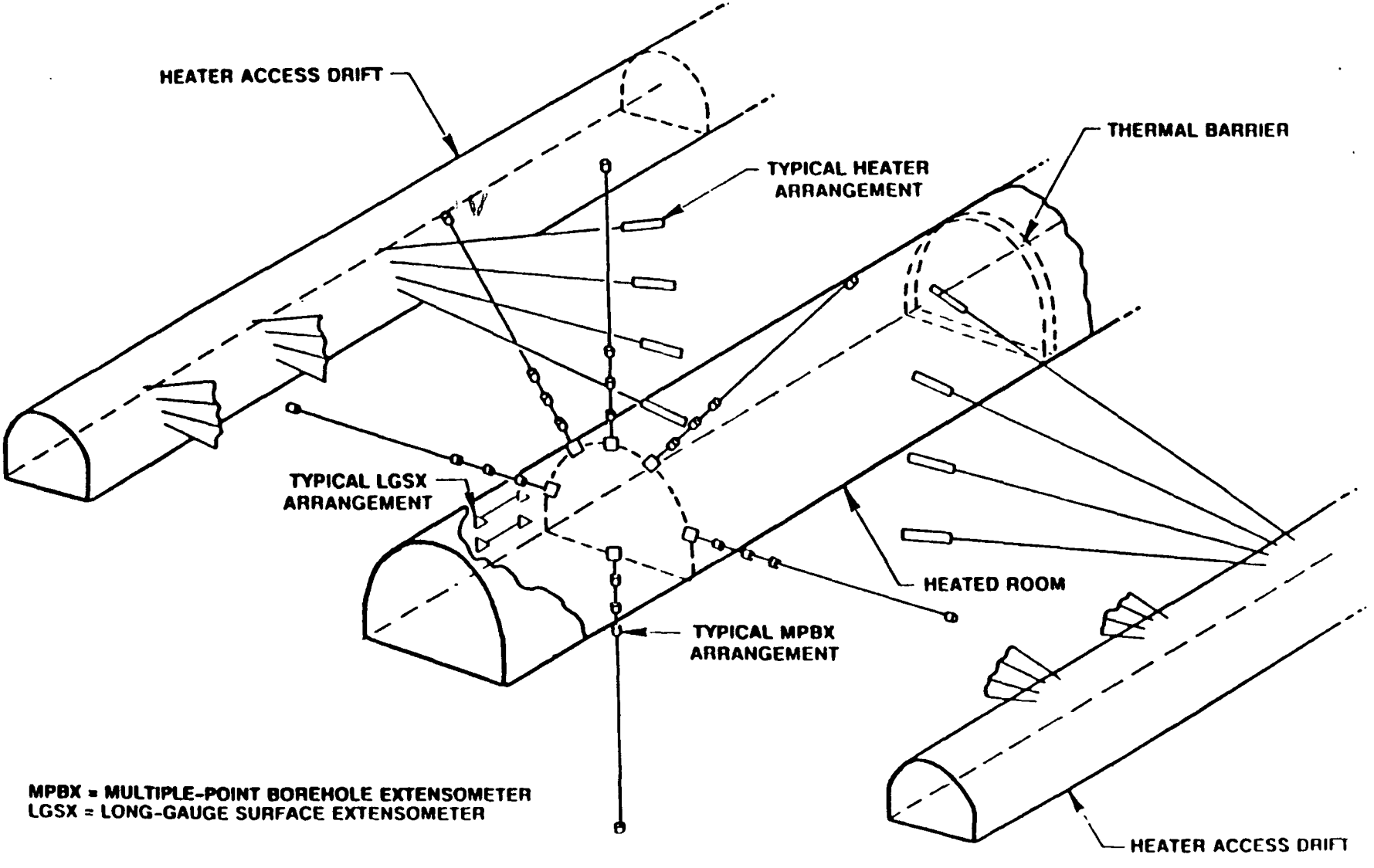

MPBX = MULTIPLE-POINT BOREHOLE EXTENSOMETER
LGSX = LONG-GAUGE SURFACE EXTENSOMETER

OTCNTB5P.125.NWTRN/10-8,10-91

Temperature Contour Plot: 40 Mo

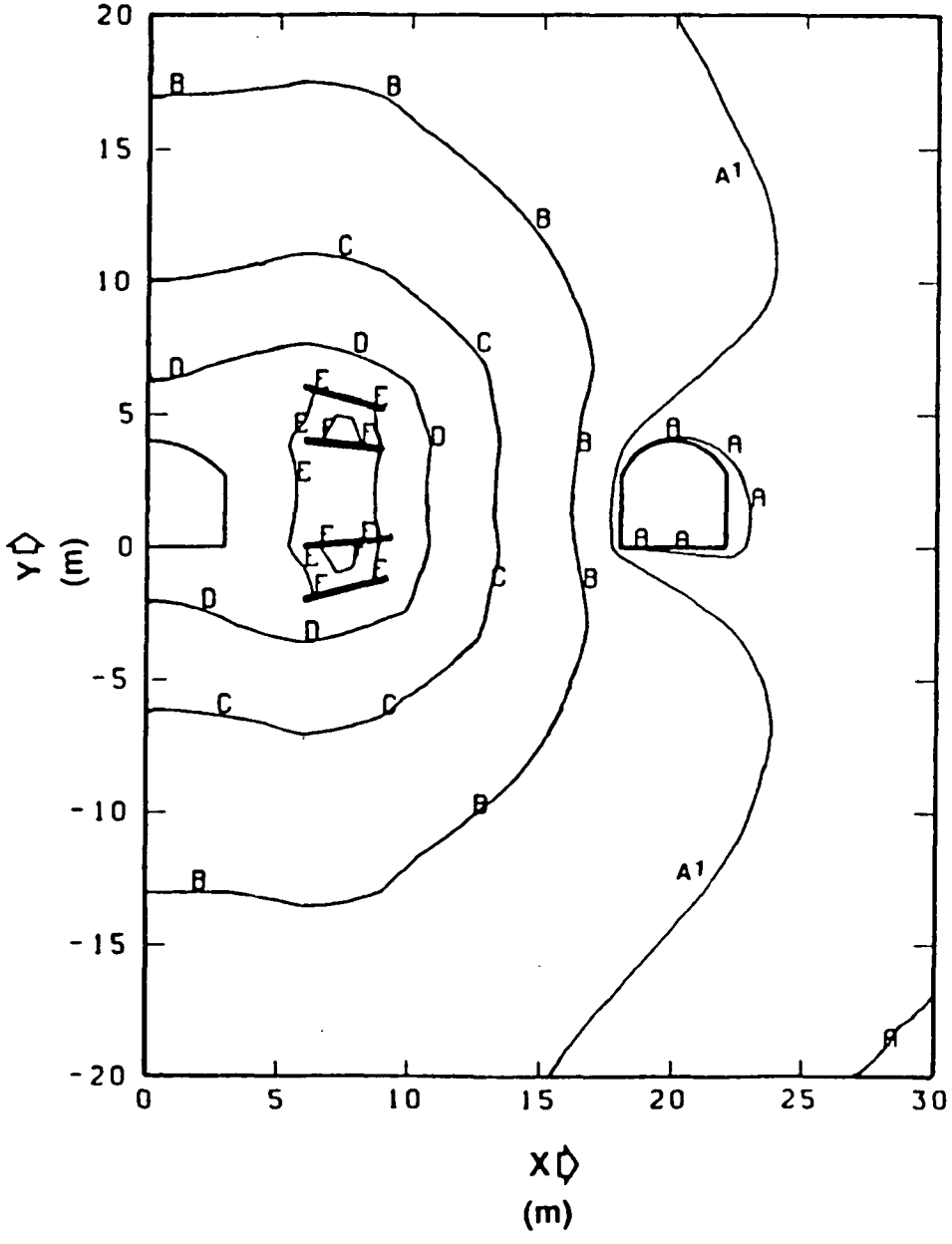

POWER = 50 kW

TEMPERATURE (°C)

A = 32.0
A1 = 36.0
B = 60.0
C = 100.0
D = 150.0
E = 200.0
F = 230.0

OTCNTB5P.125.NWTRN/10-8,10-91

Horizontal Stress Contours at 40 Mo

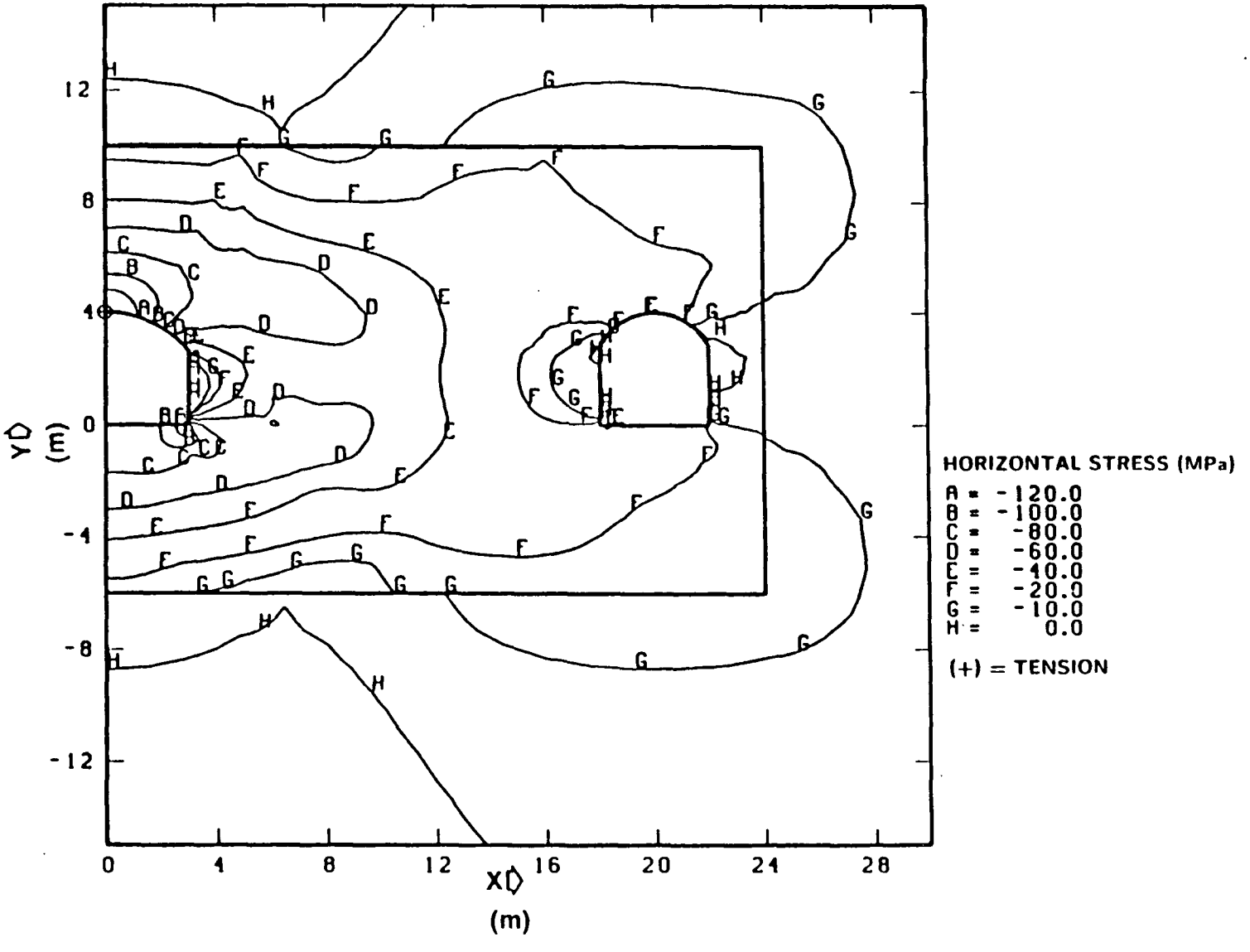

OTCNTB5P.125.NWTRN/10-8,10-91

Effects of Lower Thermal Loading

A Little Lower

- All field experiments conducted
- Temperature ranges lower for lab tests
- Instrumentation problems reduced
- Time required lower for thermomechanical tests

Effects of Lower Thermal Loading

A Lot Lower

- Elimination of some or most field thermal-mechanical experiments
- Reduction in lab-properties tests

Effects of Higher Thermal Loading

- Slightly modify some field experiments
- Expand the range of some lab-properties tests

Conclusions

- Thermal loading can be accommodated with possible Δ to testing program

- Present plans accommodate a wide temperature range