U.S. DEPARTMENT OF ENERGY
OFFICE OF CIVILIAN RADIOACTIVE WASTE MANAGEMENT

NUCLEAR WASTE TECHNICAL REVIEW BOARD
PANEL ON STRUCTURAL GEOLOGY & GEOENGINEERING

SUBJECT: TECHNOLOGY TO SEAL UNDERGROUND OPENINGS

PRESENTER: DR. ARCHIE M. RICHARDSON

PRESENTER'S TITLE AND ORGANIZATION: ASSOCIATE
J.F.T. AGAPITO & ASSOCIATES, INC.
GRAND JUNCTION, COLORADO

PRESENTER'S TELEPHONE NUMBER: (303) 262-4220

NOVEMBER 12-13, 1991

Overview

1) Sealing Components
2) Preconditioning of Sealing Areas
3) Material Preparation and Handling
4) Backfill Placement Methods
5) Seal Component Emplacement

1) Sealing Components

General Backfill

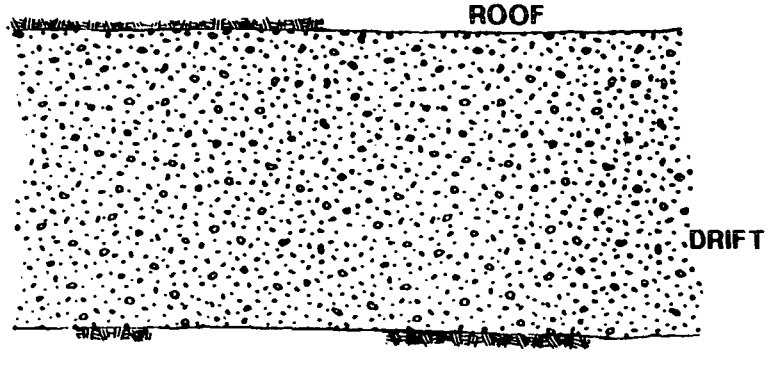

Function

- Opening stability
- Capillary barrier

Comment

- Crushed tuff
  - Welded
  - Nonwelded
- Free-draining
- Drifts and ramps

1) Sealing Components
Continued...

Single Embankment With Keyway and Grout Curtain (Cross-Section)

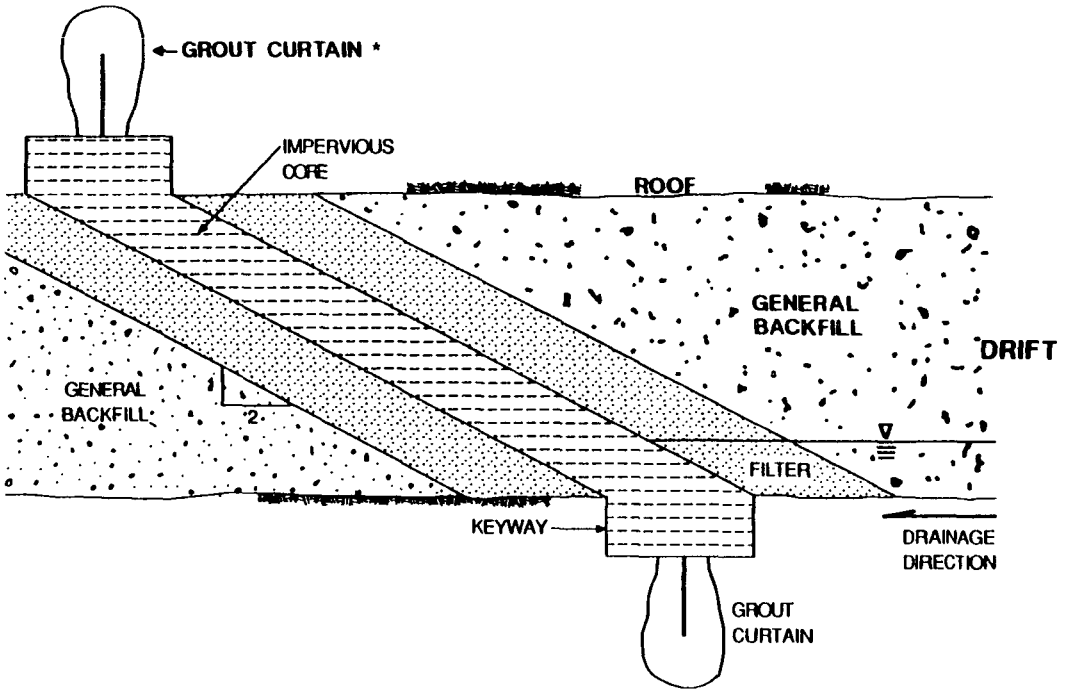

*Grout curtain around entire impervious core

Function

- Prevents water migration along drift

Comments

- Layered fill
- Graded filter
- Emplaced within general fill
- Drifts and ramps

1) Sealing Components
Continued...

Repository Station Plug

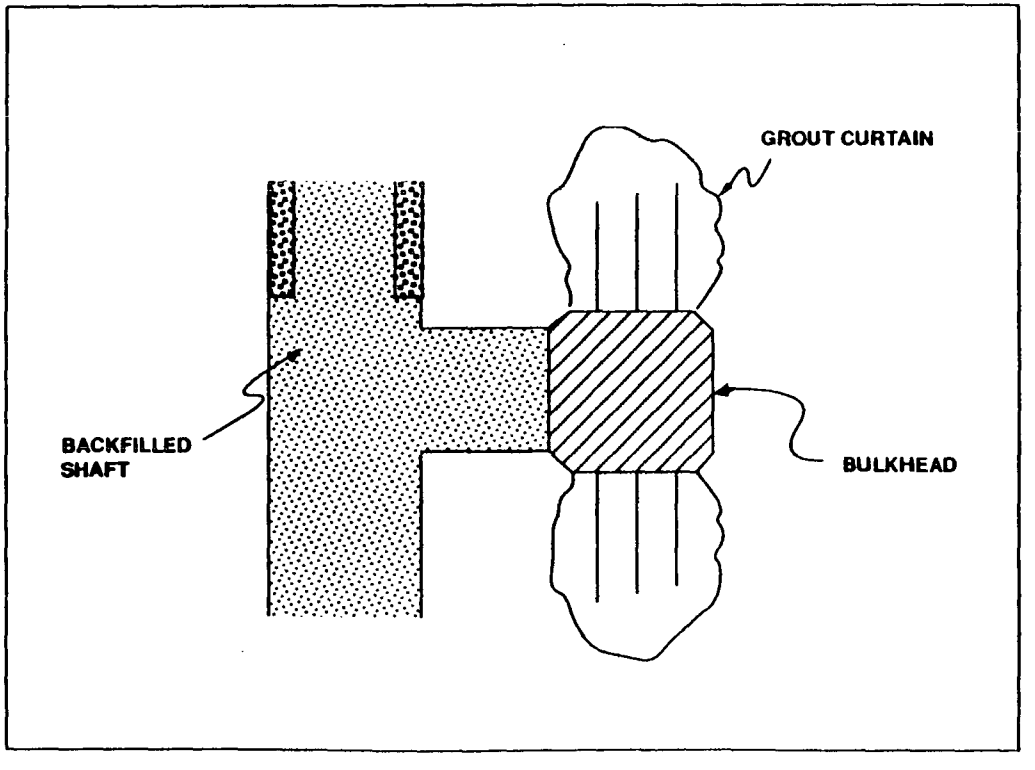

Function

- Isolates shaft/ramp inflows from repository drifts
- Accommodates extremely unlikely inflow conditions

Comments

- Could require extensive grouting
- Effective hydraulic conductivity 10^{-6} to 10^{-5} cm/s

*Grout curtain around entire impervious core

1) Sealing Components
Continued...

Water Control Concept With Drainage Enhancement

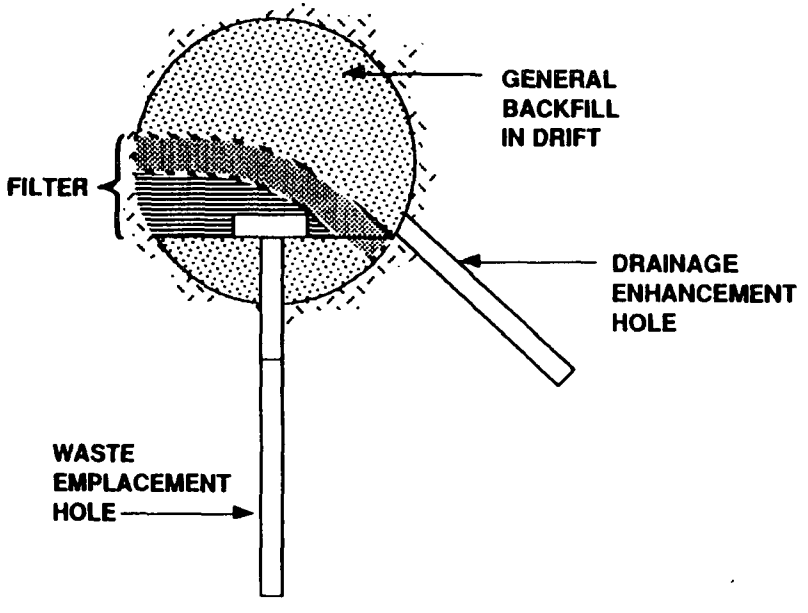

Function

- Diverts water away from waste package

Comment

- Emplacement areas
- Layered fill with multiple materials

1) Sealing Components
Continued...

Backfilled Sump

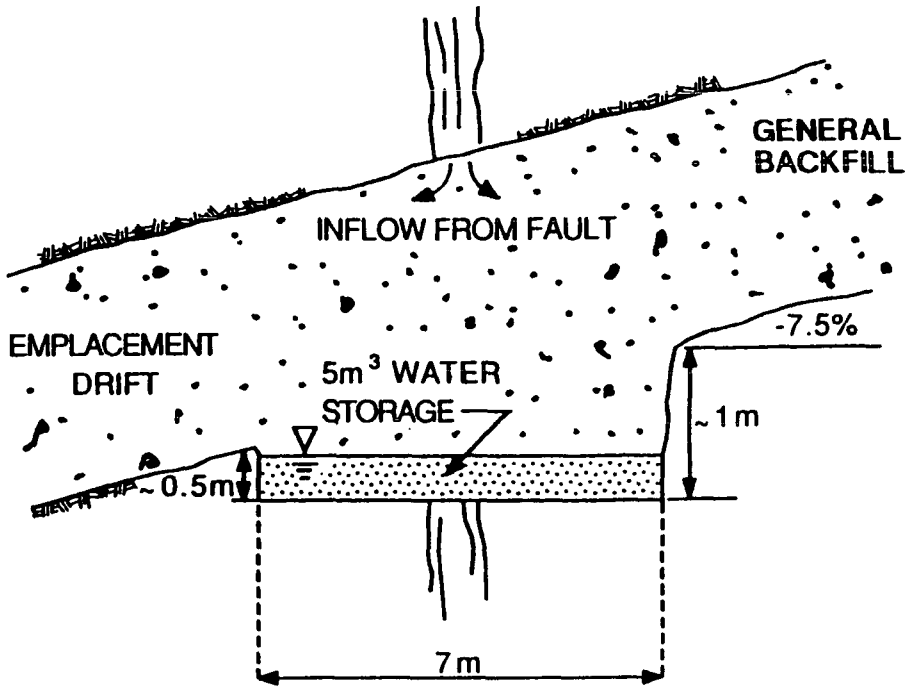

Function

- Increases retention time and promotes drainage

Comment

- Requires additional excavation into drift floor
- Drifts and ramps

2) Preconditioning of Sealing Areas

Excavation Surface Conditions

TBM

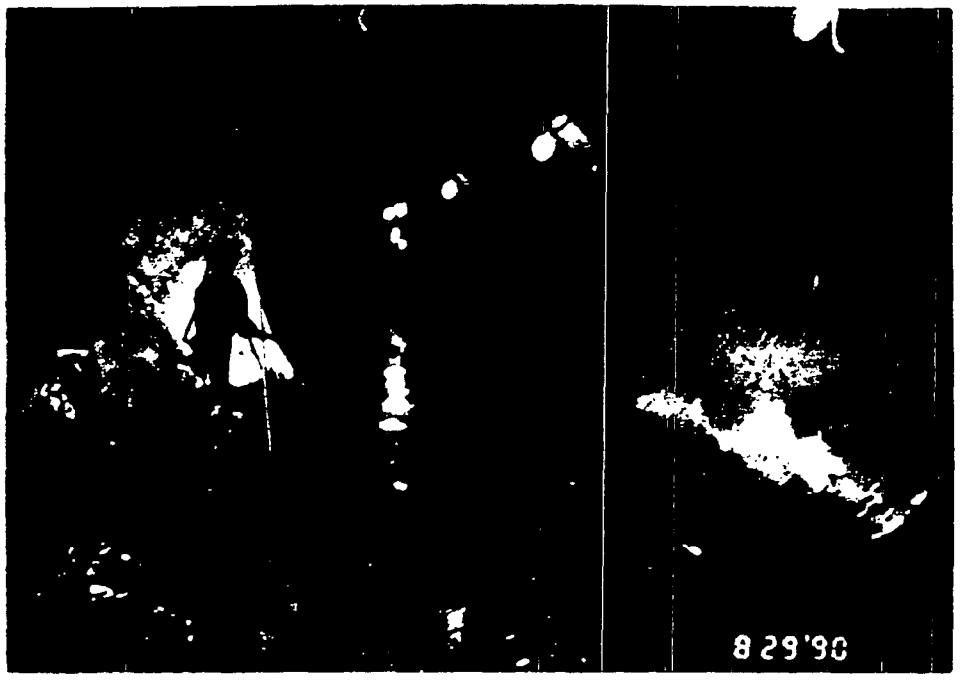

Comment

- Smooth seal interface
- Minimum rock disturbance
- Relatively inflexible

Drill and Blast

Comment

- Rough seal interface
- More rock disturbance
- Relatively flexible

2) Preconditioning of Sealing Areas

Continued...

- Removing support systems and infrastructure
  - Liners
  - Floors
  - Rock bolts
- Additional excavation
  - Ditches
  - Sumps
  - Floor
- Surface preparation
- Drainage enhancement
  - Boreholes
  - Slot cuts

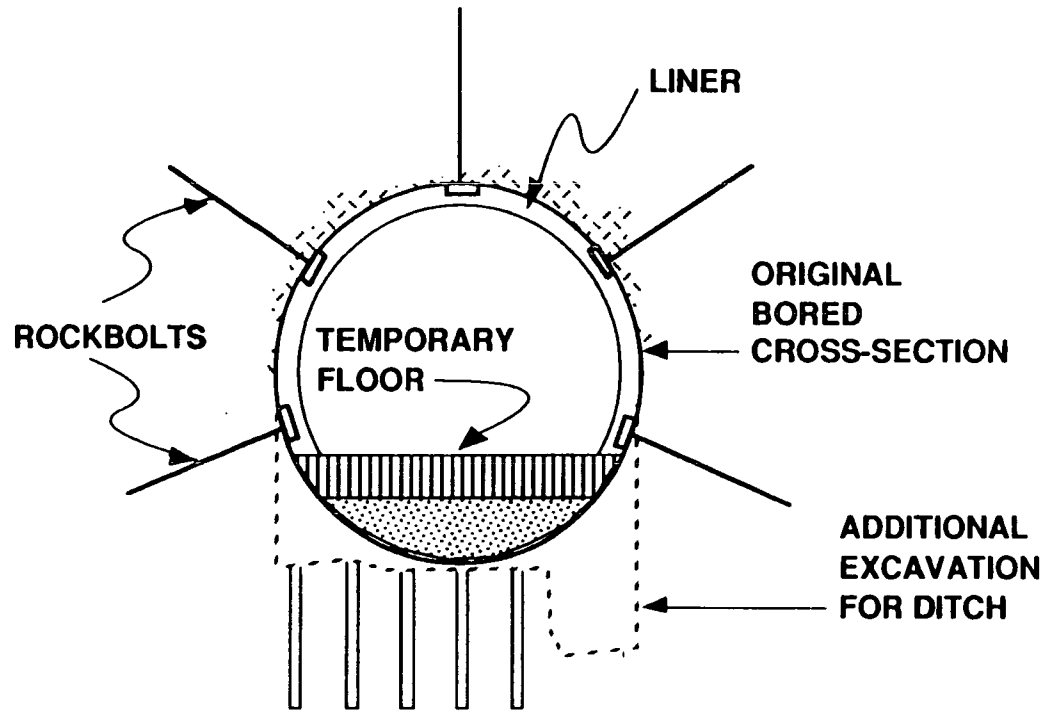

3) Material Preparation and Handling

Typical Fill Materials

- **Bulk granular material**
- **Bulk cementitious material**
- **Specialized materials**
  - **Grout**
  - **Clay**

3) Material Preparation and Handling

Continued...

Bulk Granular Material

Tuff Size Gradation Schematic

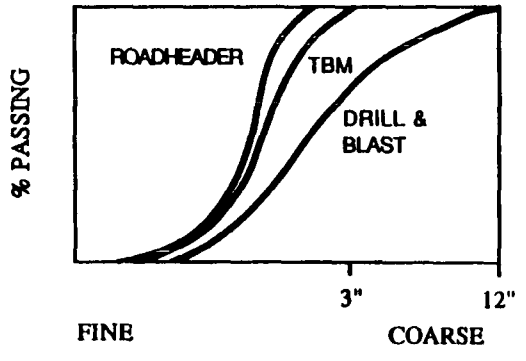

Comment

- Mined material size gradations dependent on excavation method and location
- Fines generation/degradation may occur during handling
- Backfill sizing operations may be required

3) Material Preparation and Handling

Continued...

Material Flow Diagram

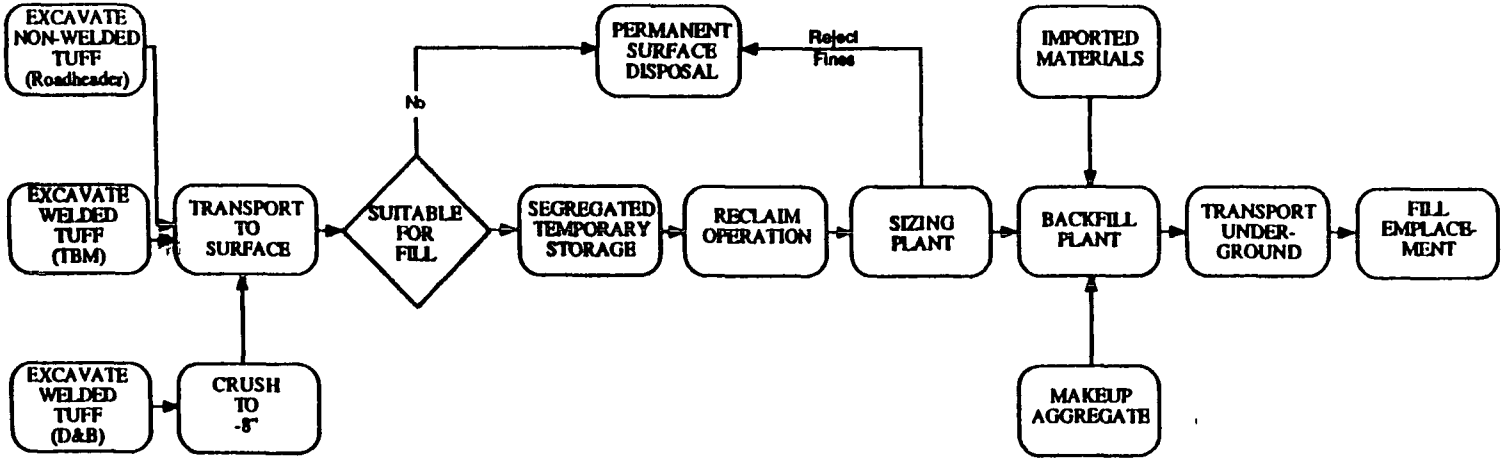

4) Backfill Placement Methods

Overview of Methods

- **Mechanical emplacement and compaction**
- **Throwing methods**
  - **Pneumatic**
  - **Slinger**
- **Other methods**
  - **Gravity**
  - **Hydraulic**

4) Backfill Placement Methods

Continued...

Mechanical Backfilling and Compaction

Rear Dump Truck

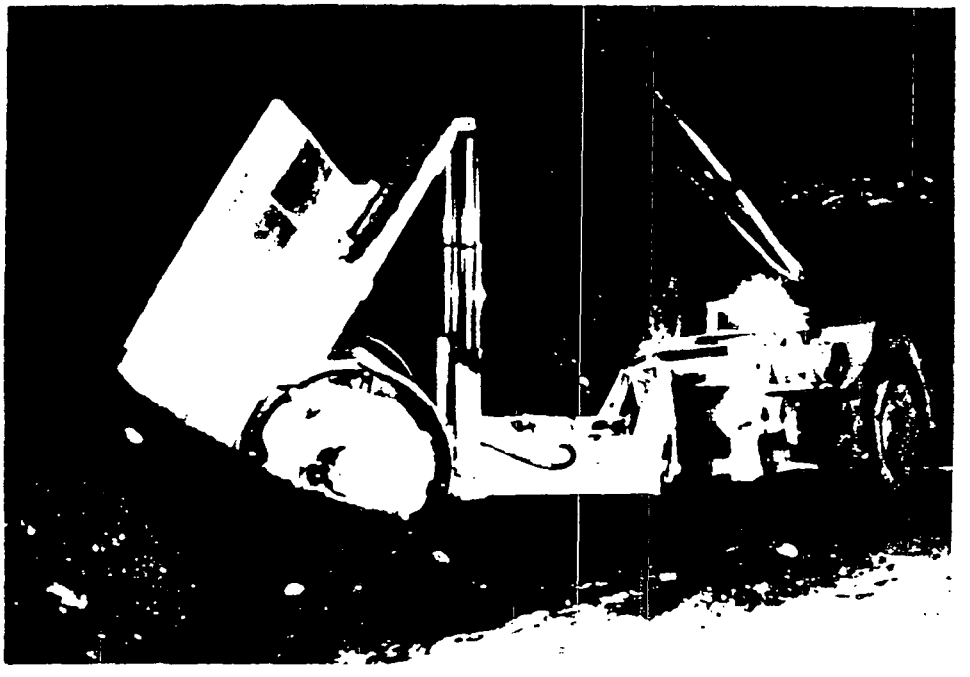

Comment

- Asamera Cannon Mine

Concern

- Clearance problems

Modified LHD

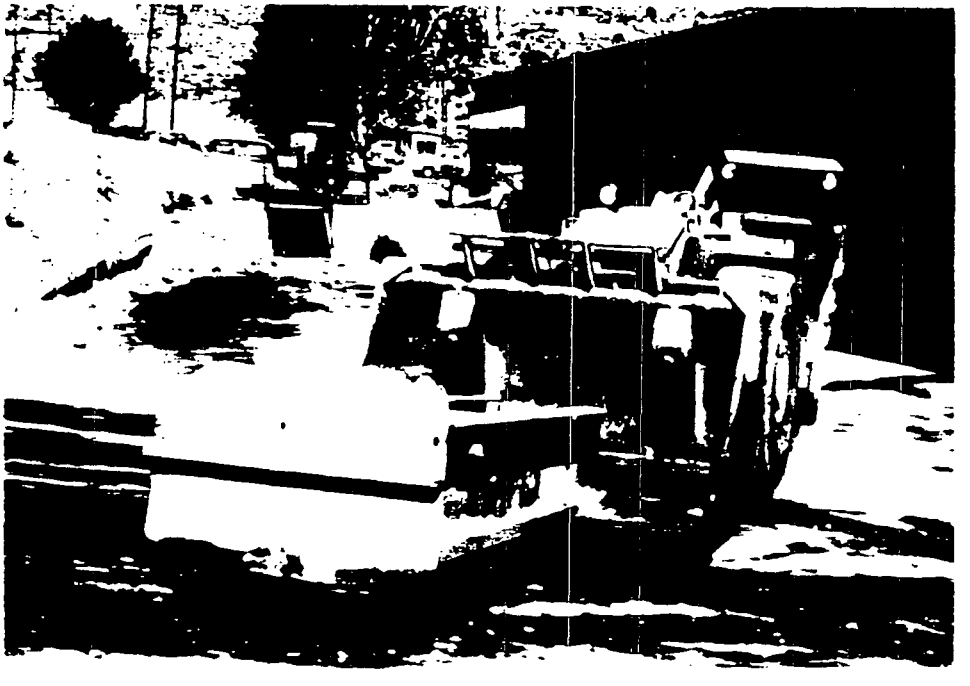

Comment

- Asamera Cannon Mine

4) Backfill Placement Methods

Continued...

Typical Mechanical Backfill Face

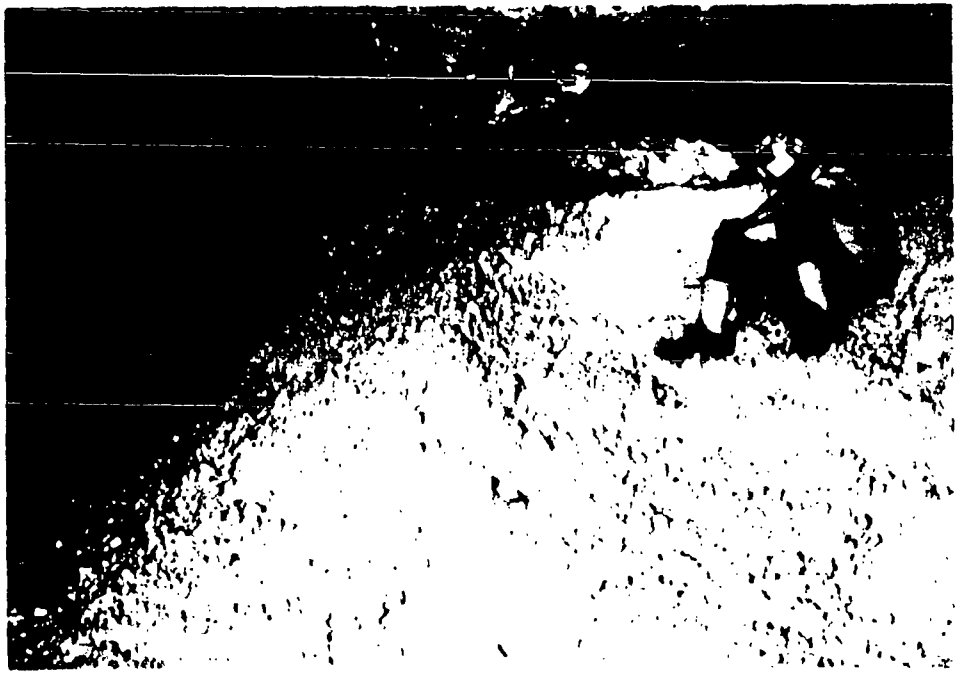

Comments

- Asamera Cannon Mine
- Emplaced by modified LHD

Concerns

- Fill tight to back
- Clearance
- Layered fill emplacement

4) Backfill Placement Methods

Continued...

Compaction

Hand-Held Vibratory Rammer

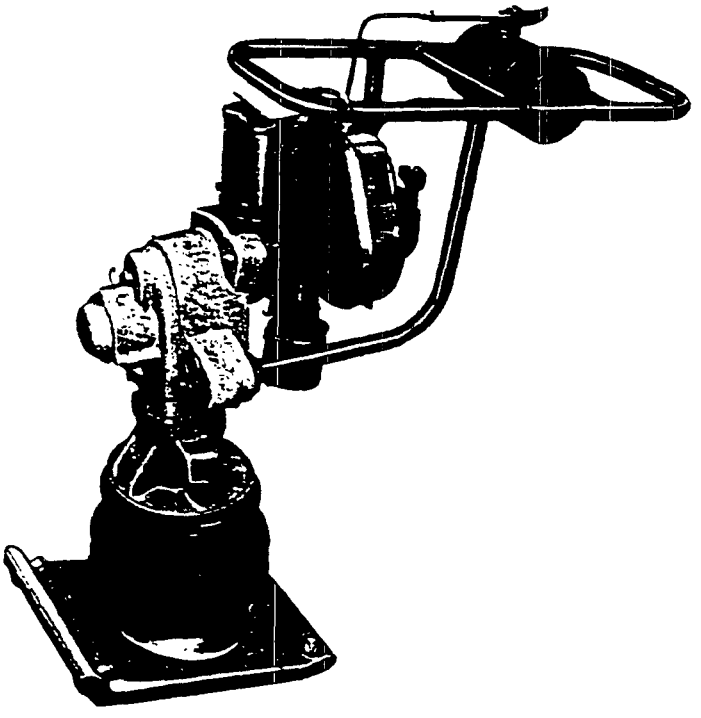

Function

- Suitable for confined areas, granular materials

Comment

- Labor intensive

Vibratory Roller

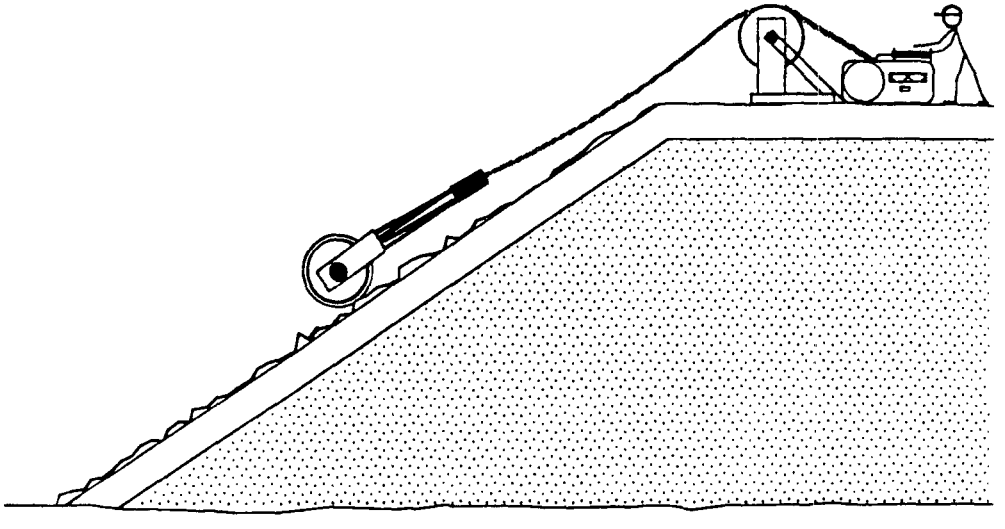

Function

- Surface rockfill embankment

Comment

- Could be adapted for underground use

4) Backfill Placement Methods

Continued...

Compaction *Continued...*

Small Tamping Compactor

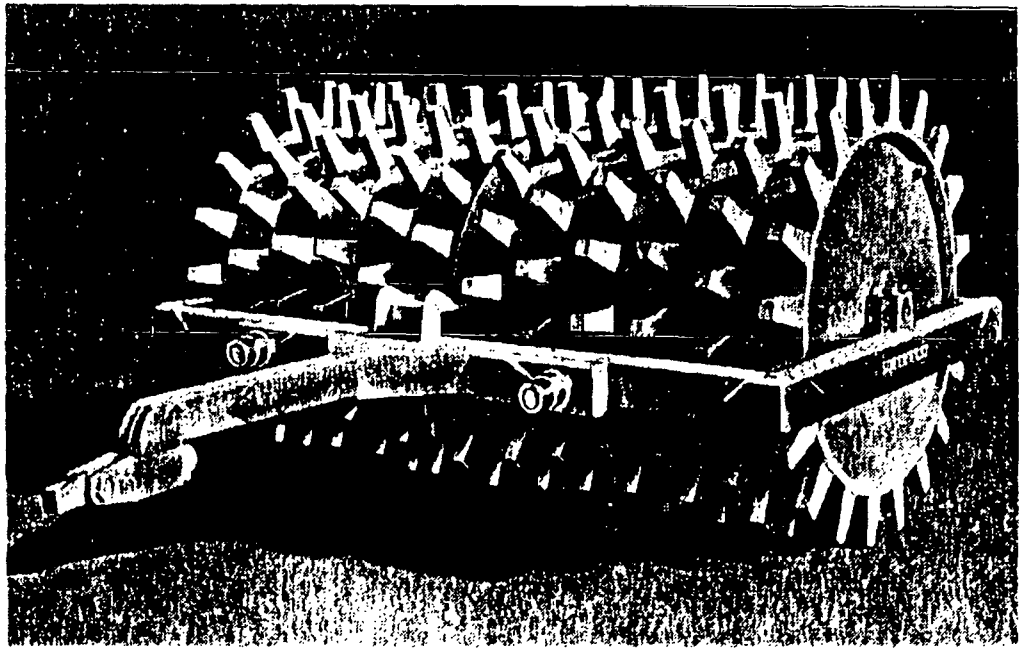

Function

- Suitable for clay materials

Comment

- Could be adapted for underground use

4) Backfill Placement Methods

Continued...

Compaction *Continued...*

Comment

- **Technology well established above ground**
- **More difficult underground**

GENERALIZED RANGE OF APPLICATIONS FOR COMPACTORS ACCORDING TO MATERIALS (after Church, 1981)

KIND OF COMPACTOR	RESIDUALS			WEATHERED ROCK-EARTH, RIPPED			SEMISOLID AND SOLID ROCK, BLASTED	
	CLAYS	SILTS	SANDS	MAXIMUM WEATHERED	AVERAGE WEATHERED	MINIMUM WEATHERED	WELL BLASTED	POORLY BLASTED
SHEEPSFOOT	X	PRESSURE-KNEADING			X			
TAMPING FOOT	X	PRESSURE-KNEADING-IMPACT-VIBRATION					X	
VIBRATORY FOOTED DRUM		X	PRESSURE-KNEADING-VIBRATION		X			
SMOOTH DRUM					X	VIBRATION		X
PNEUMATIC TIRES				X	PRESSURE-KNEADING		X	

KIND OF COMPACTOR	ALLUVIA		
	SANDS	GRAVELS	COBBLES
VIBRATORY, SMOOTH DRUM	X	VIBRATION	X
PNEUMATIC TIRES	X	PRESSURE-KNEADING	X

SEALING COMPONENTS ↑ IMPERMEABLE COMPONENTS ↑ FILTER ↑ GENERAL FILL

4) Backfill Placement Methods

Continued...

Throwing Methods--Pneumatic

Pneumatic Stowing at Colony

Comment

- Can place fill close to back

Concern

- Wear
- Dust
- Fill degradation
- Lack of flexibility

Oil Shale Backfill

Comment

- Minus 3" material
- Less abrasive than welded tuff

4) Backfill Placement Methods

Continued...

Throwing Methods--Pneumatic *Continued...*

Diagram of Muck Pile Stopping

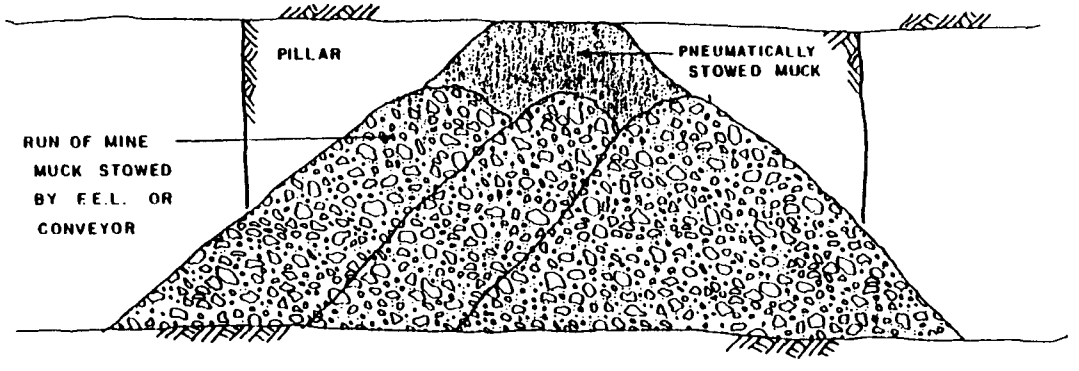

Comment

- **Used for ventilation control at colony**
- **Similar to backfill embankment**
- **Can place fill close to back**

4) Backfill Placement Methods

Continued...

Other Methods

Gravity and Hydraulic

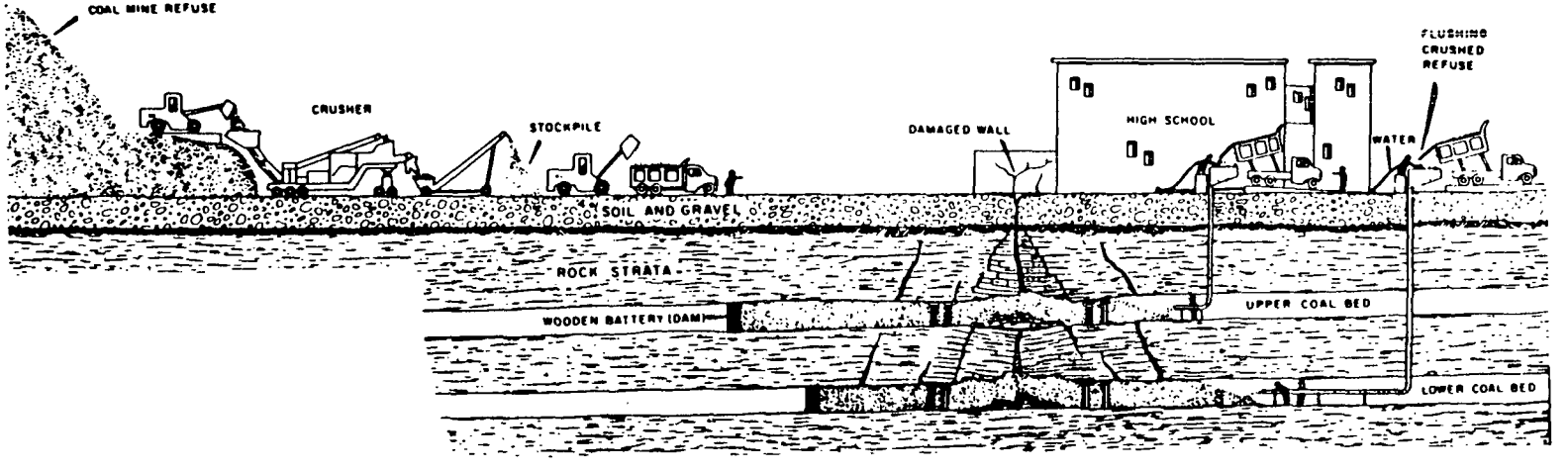

Comment

- Commonly used in mining industry

Concerns

- Require boreholes to surface
- Introduces excess water into repository

4) Backfill Placement Methods

Continued...

Throwing Methods--Belt Slinger

Truck Mounted Belt Slinger

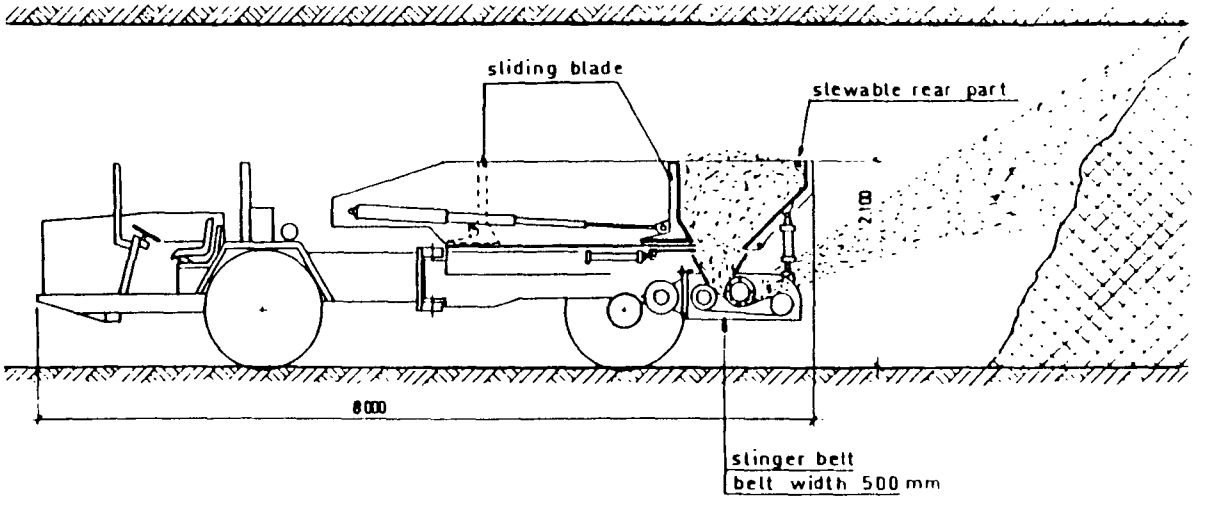

Comment

- **Suitable for granular materials**
- **Not suitable for wet fines**

5) Seal Component Emplacement

Specialized Seal Component Placement Techniques

- **Slot cutting**
- **Hole drilling**
- **Massive cementitious seal**
- **Grouting**

5) Seal Component Emplacement

Continued...

Slot Cutting

Drill and Broach Method

a) Drilling

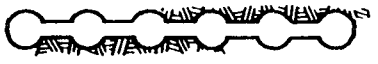

b) Broaching

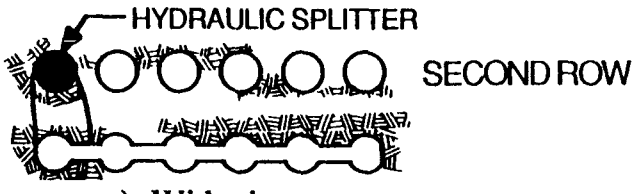

c) Widening

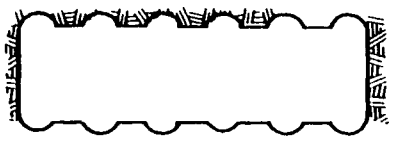

d) Final Slot

Comment

- No blasting required

Concern

- Labor intensive
- Irregular slot

5) Seal Component Emplacement
Continued...

Diamond Saw

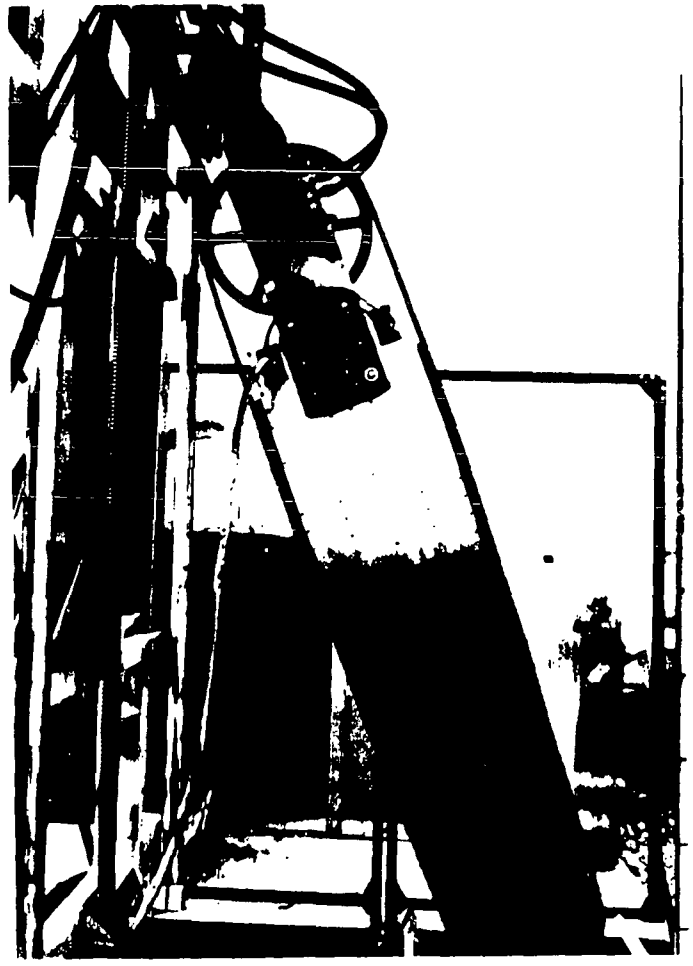

Comment

- Efficient
- Good quality slots

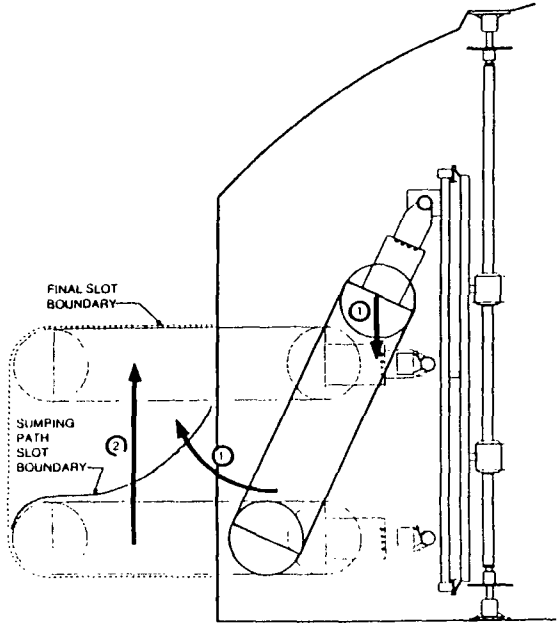

5) Seal Component Emplacement

Continued...

Example Construction Sequence

Emplacement of Single Embankment

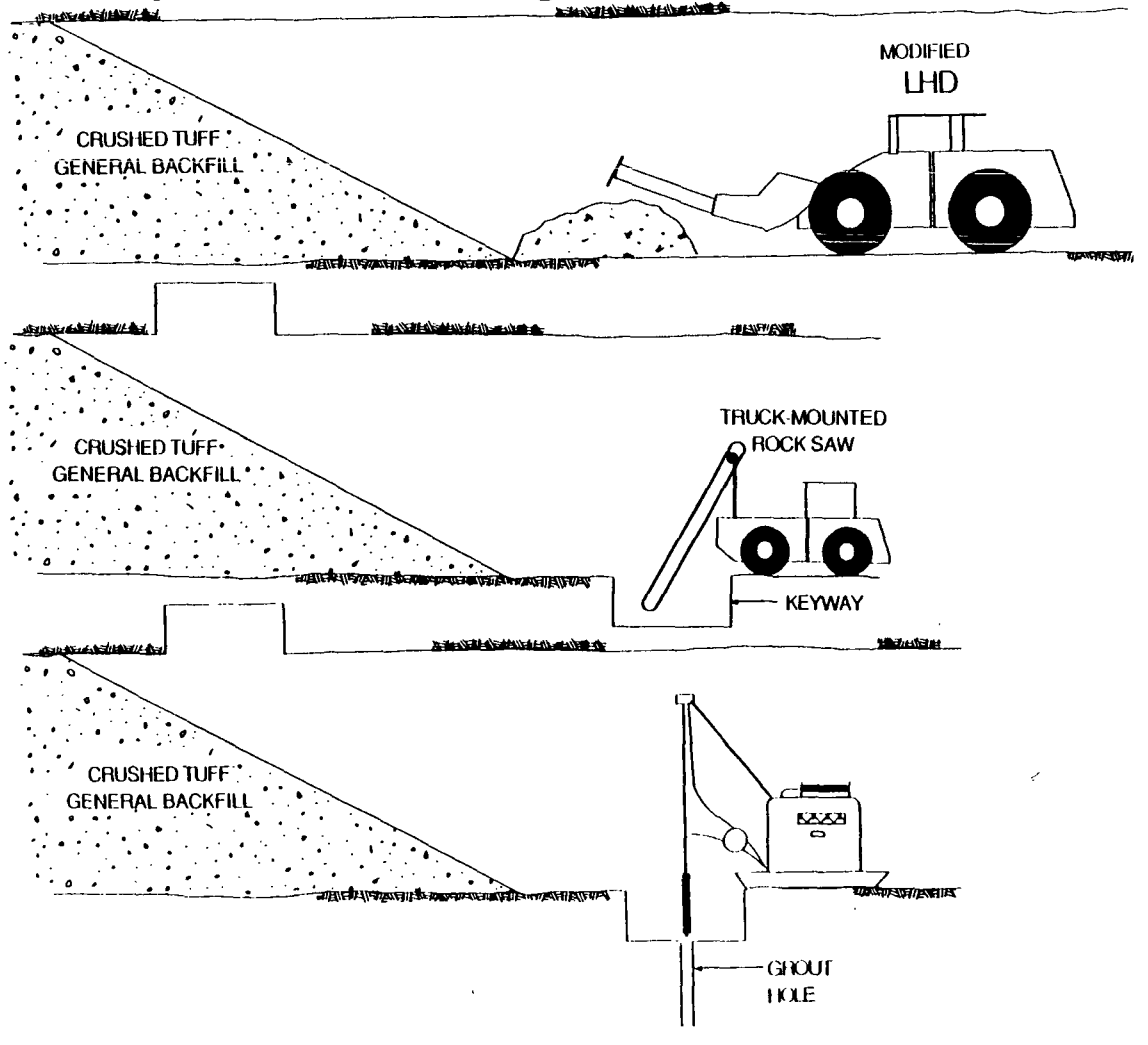

- **Emplace general fill to embankment location**
- **Excavate keyway slot**
- **Drill and grout keyway**

5) Seal Component Emplacement

Continued...

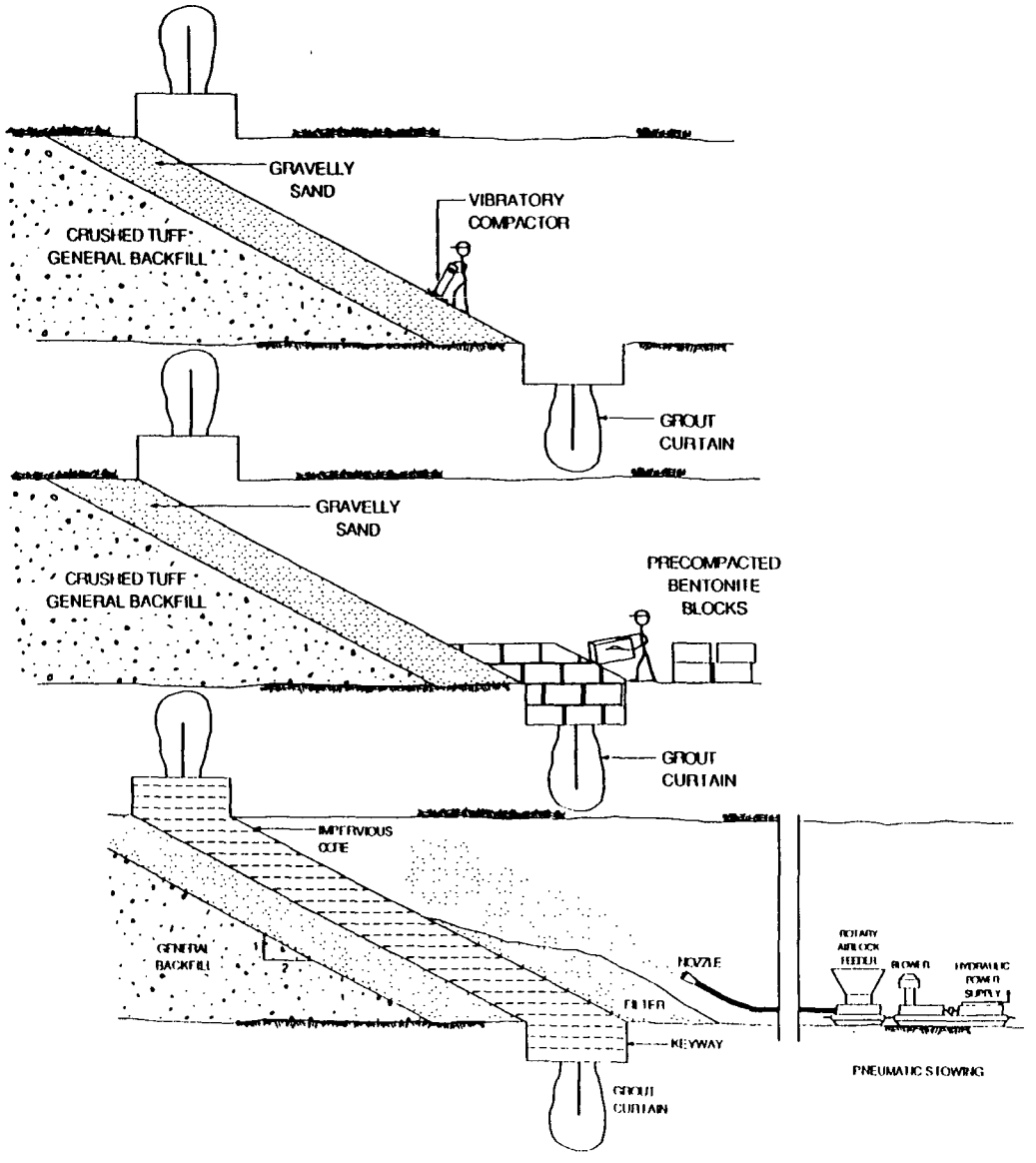

- **Emplace and compact filter material**
- **Emplace precompacted bentonite blocks**
- **Emplace front filter**

5) Seal Component Emplacement

Continued...

- **Complete single embankment, continue placing general fill**

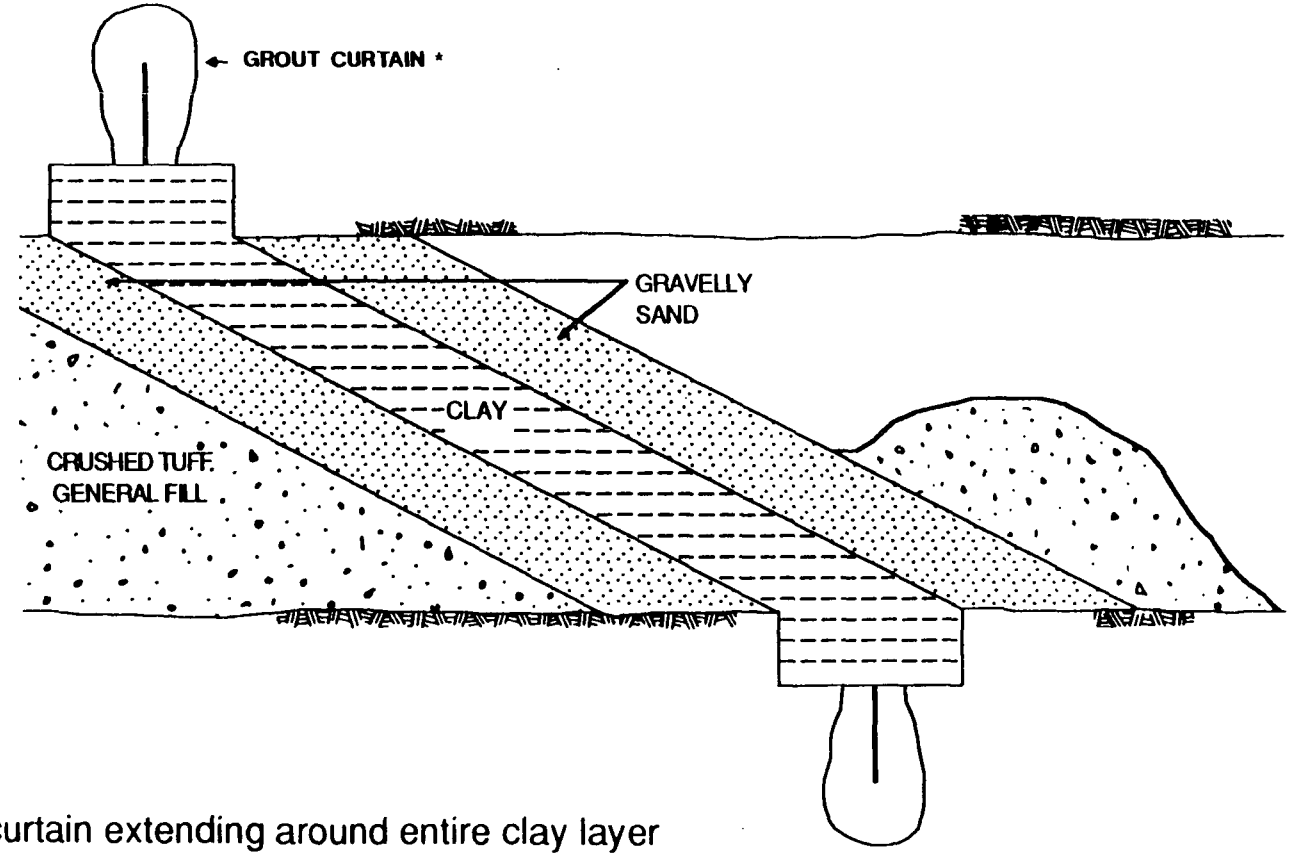

*Grout curtain extending around entire clay layer