U.S. DEPARTMENT OF ENERGY
OFFICE OF CIVILIAN RADIOACTIVE WASTE MANAGEMENT

NUCLEAR WASTE TECHNICAL REVIEW BOARD
PANEL ON STRUCTURAL GEOLOGY & GEOENGINEERING

SUBJECT: TECHNOLOGY TO SEAL EXPLORATORY BOREHOLES

PRESENTER: MALCOLM D. JARRELL

PRESENTER'S TITLE AND ORGANIZATION: TECHNICAL MANAGER
IT CORPORATION
AUSTIN, TEXAS

PRESENTER'S TELEPHONE NUMBER: (505) 262-8712

NOVEMBER 12-13, 1991

Technology to Seal Exploratory Boreholes
Scope of Presentation

- Sequence of operations
- Borehole pre - conditioning
- Seal selection and emplacement techniques
- Seal testing
- Unusual conditions to be expected

Precondition Borehole

- Routine operations
  - Tubing, packer and screen removal
- Specialty operations
  - Fish and junk removal
  - Casing removal
  - Borehole scratchers
  - Underreaming

Jet Casing Cutter

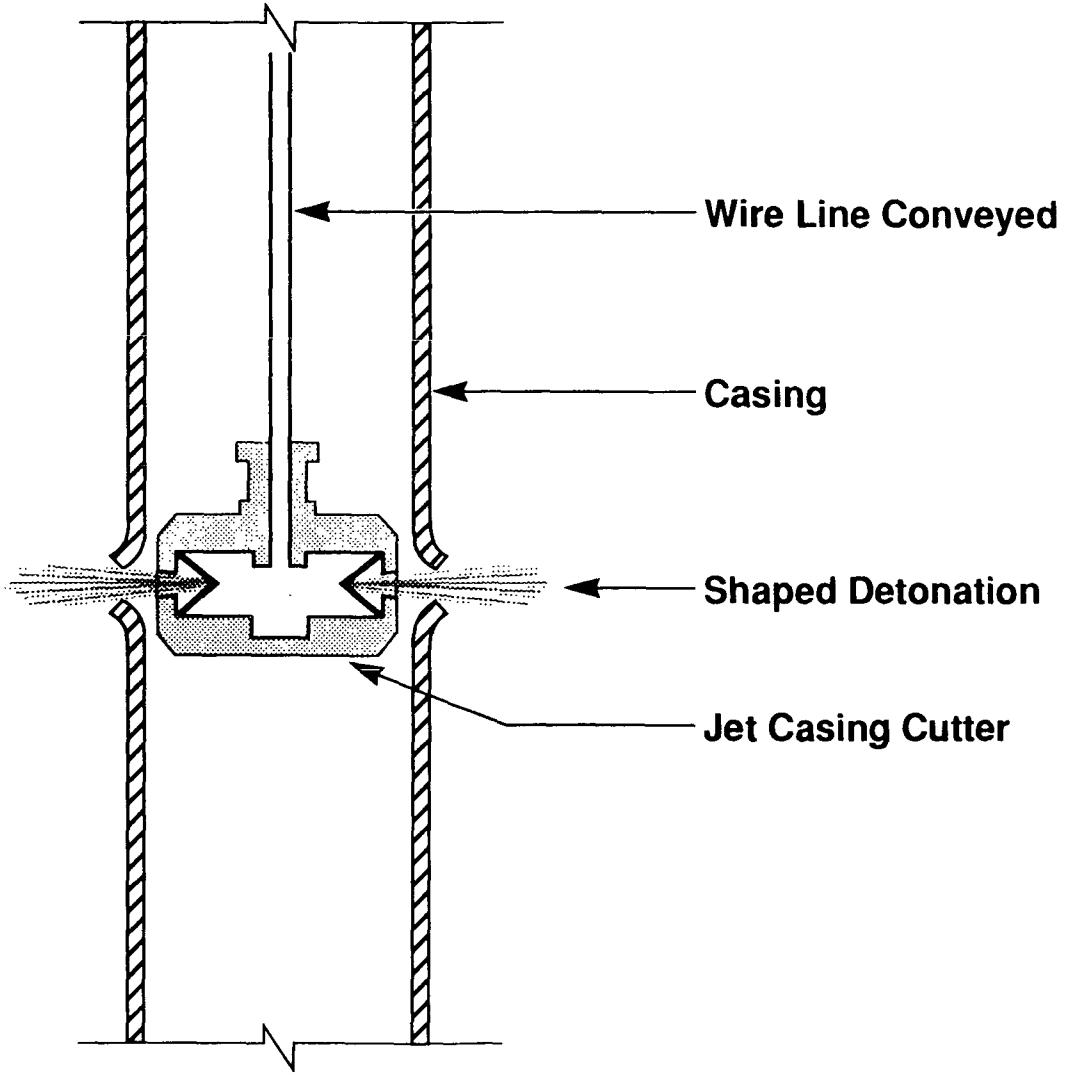

Inside Hydraulic Casing Cutter

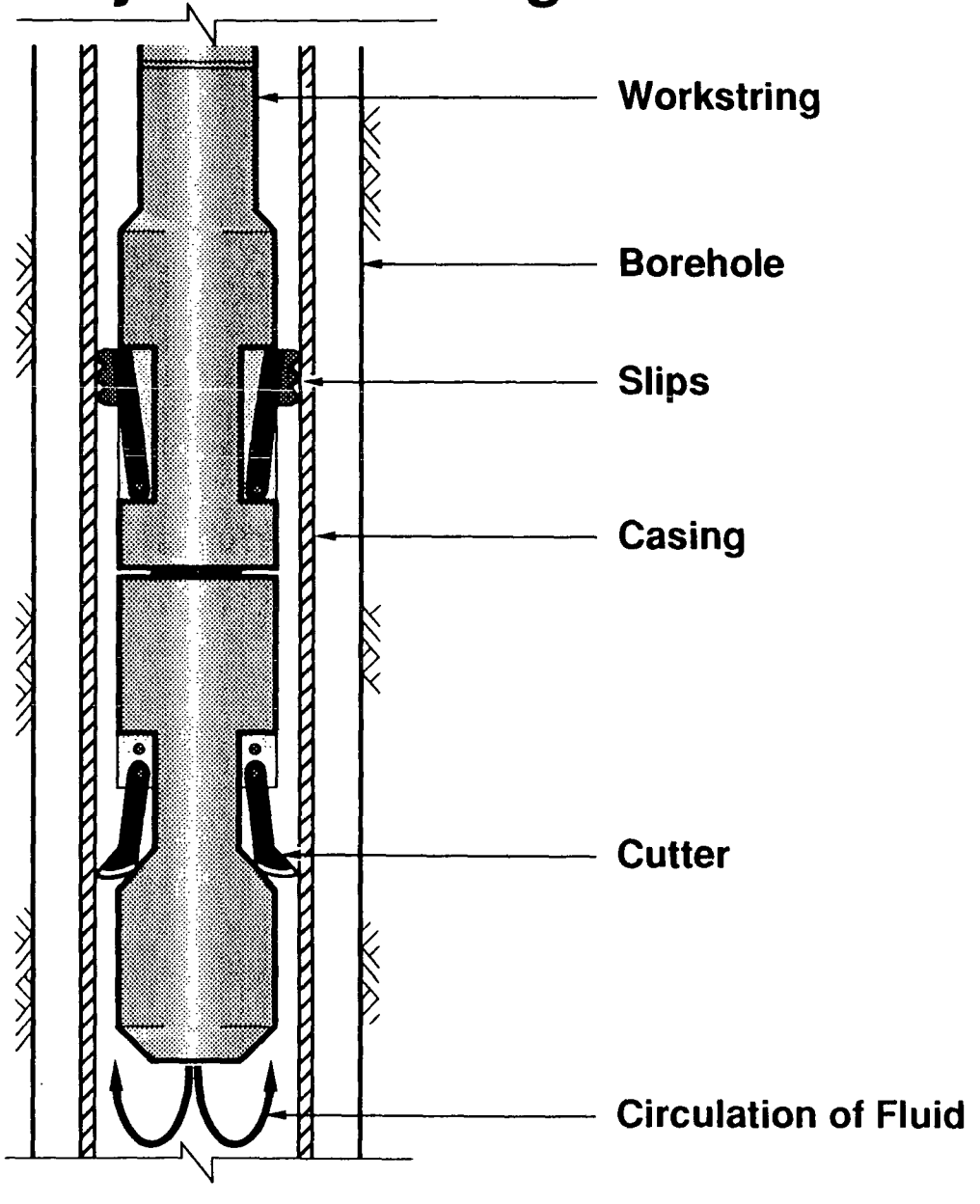

Removing Section of Casing

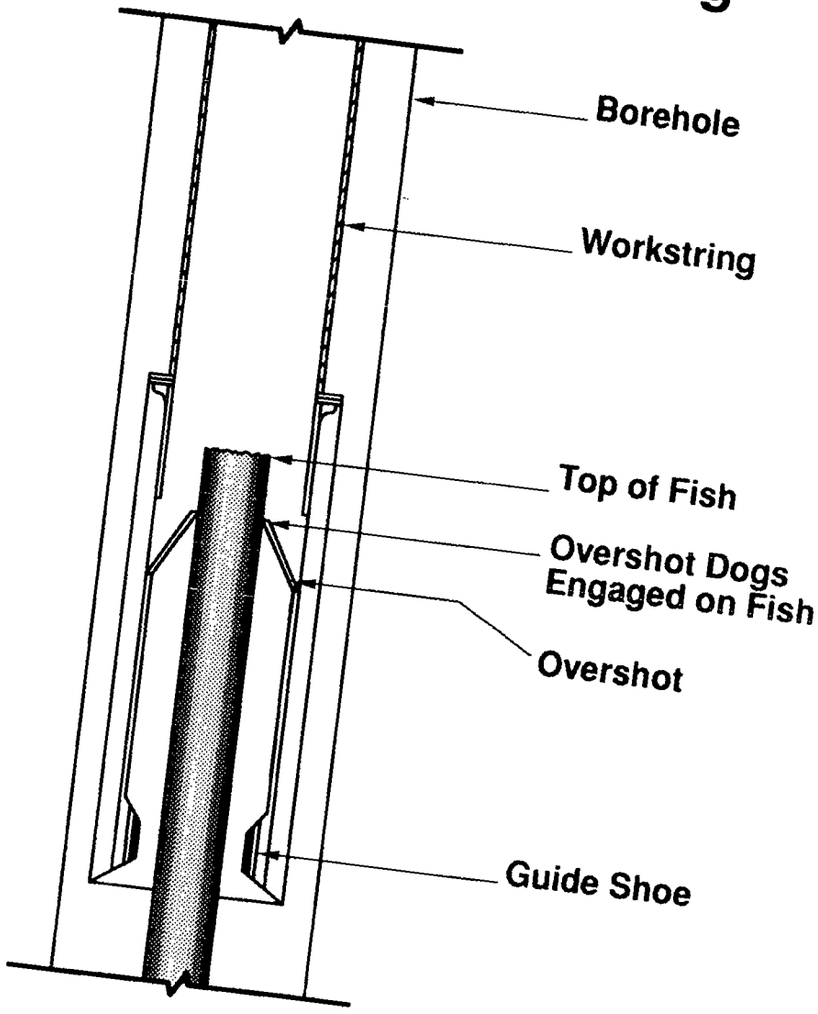

Removing Wall Cake with Scratchers

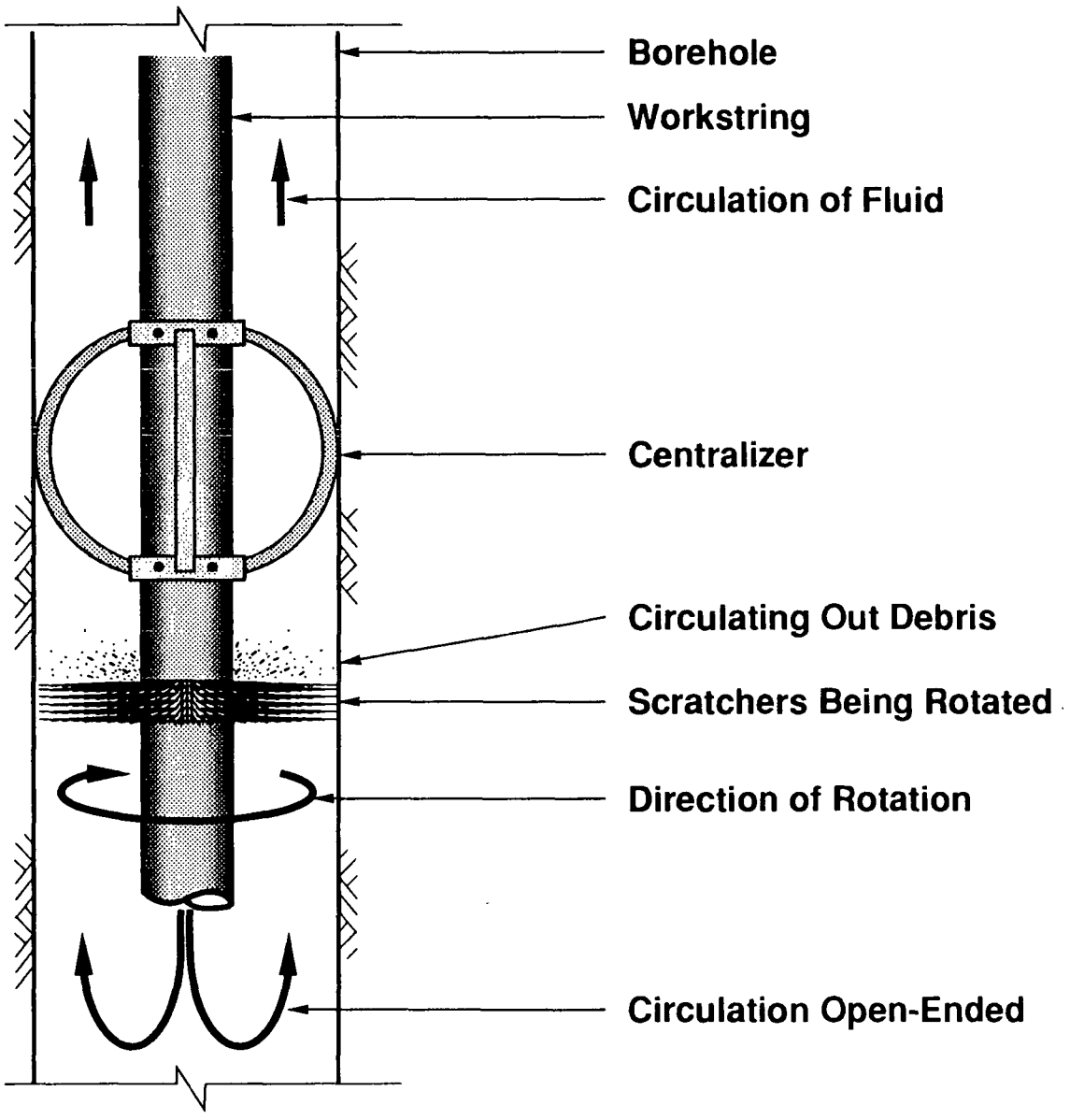

Examples of General Problems that Interfere with Borehole Sealing

- Collapsed casing
- Large wash-outs or caved-in areas
- Lost tools and equipment in hole
- Lost fishing tools and junk in hole
- Cemented or stuck tubular goods
- "Thief" zones

Seal and Fill Placement Techniques

Cement Plugs

- Dump bailer
- Balanced plug
- Two plug
- Pressure squeeze

Clay and Sand Seals

- Pumped as slurry
- Poured from surface as powder/pellets

Selection of Cement Plugs

Advantages

- Tailored to fit need
- Provides structural support
- Holds fluid pressure
- Can be expansive
- Self supporting after curing

Disadvantages

- May crack or shrink during hydration
- Expands/shrinks with thermal cycles
- Some blends sensitive to contamination
- Strength retrogression at high temperature

Selection of Clay Seals

Advantages

- Sorptive
- No heat of hydration

Disadvantages

- Shrinks/cracks in unsaturated zone
- May not hold fluid pressure
- Minimal structural support

Dump Bailer Method of Plug Emplacement

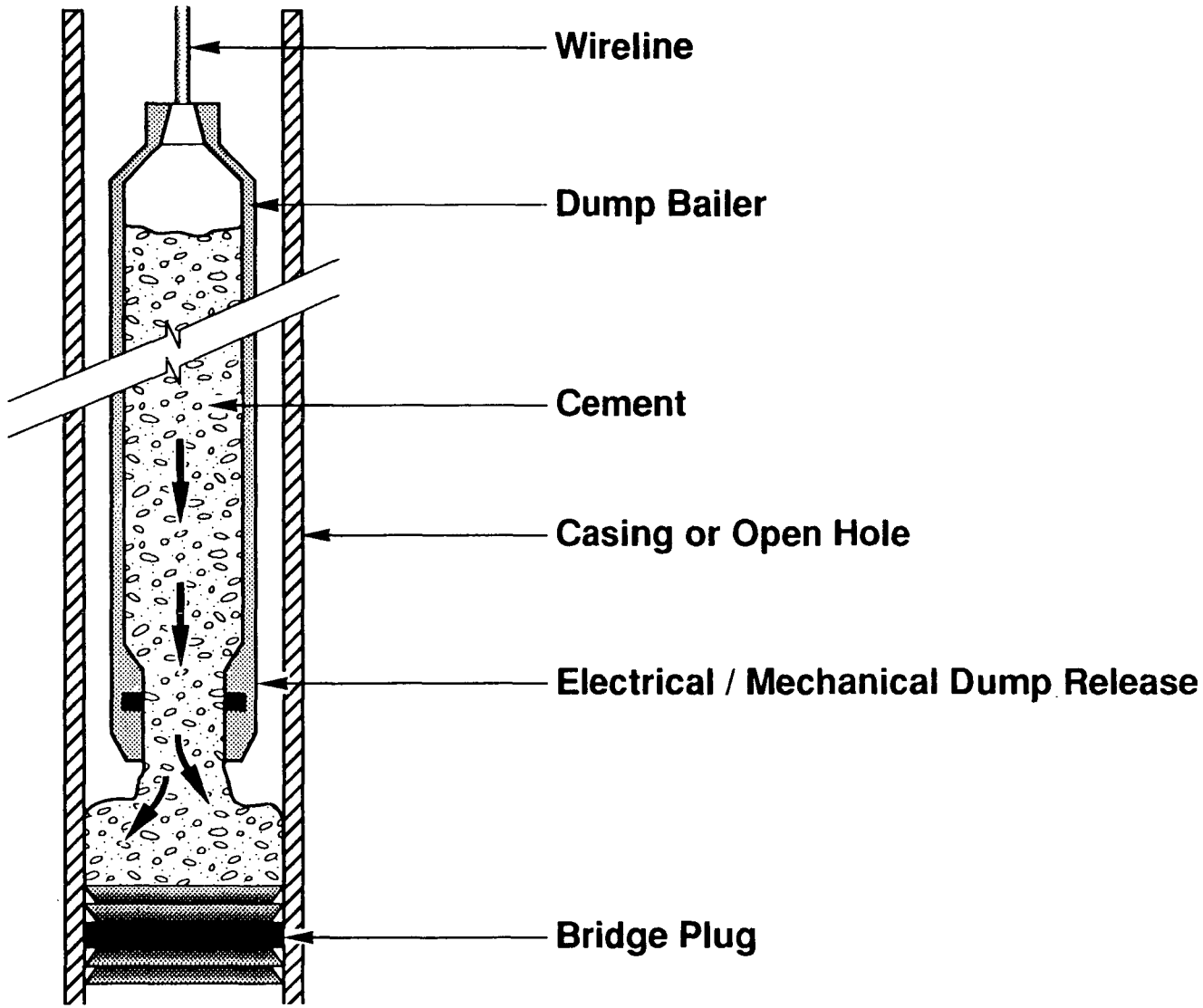

BALANCED PLUG EMPLACEMENT

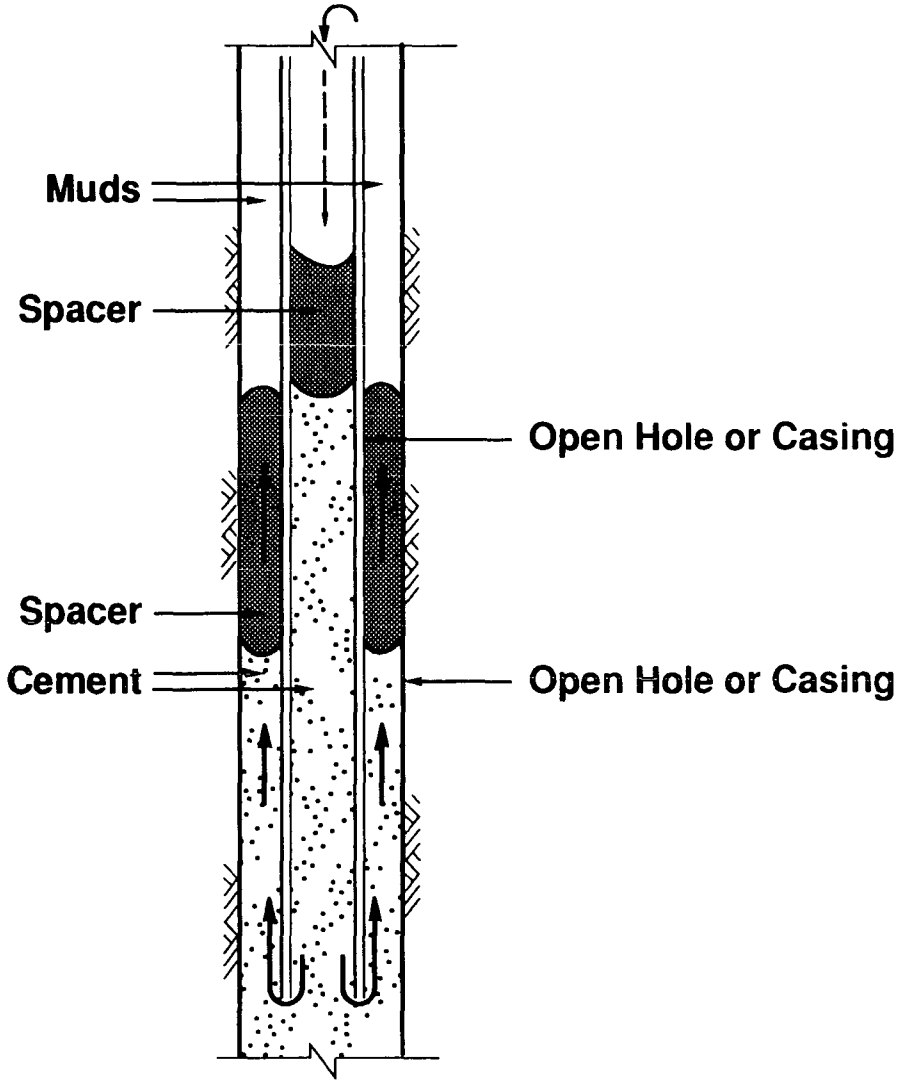

Low Pressure Squeeze Conceptual Diagram

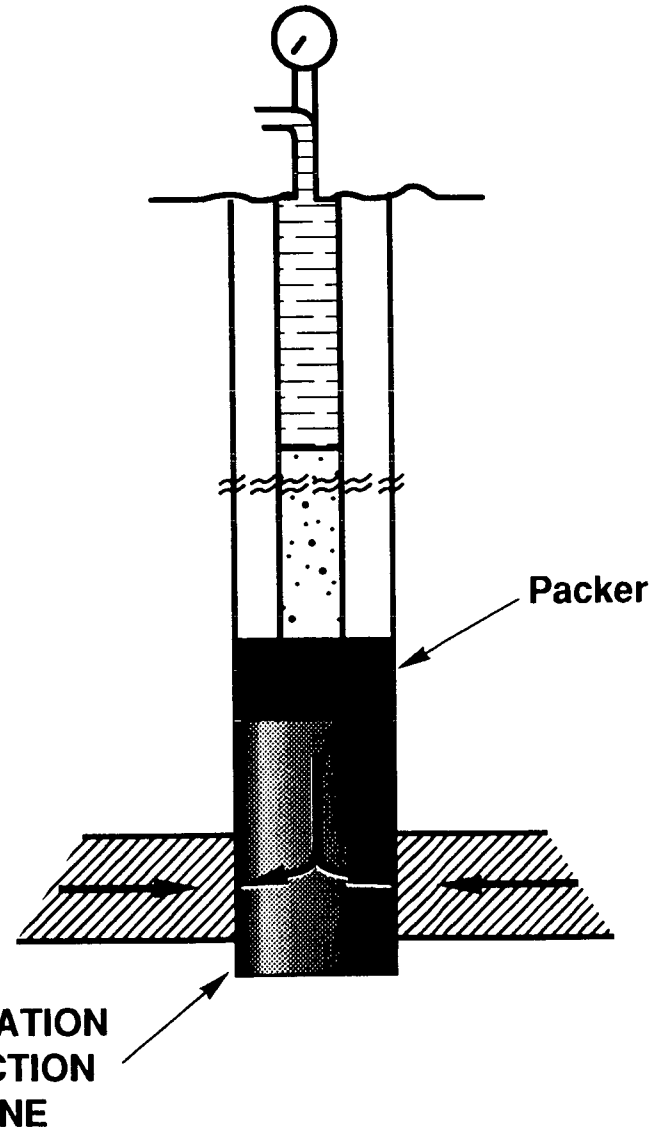

Note:

Injection Pressure Established From Surface Pressure, The Fluid Column Height and Formation Fracture Pressure

Testing and Quality Control of Cement Plugs

- API published specifications
- Laboratory testing of "bonding" to host rock
- Sample testing program - during field application
- Verification of seal placement and curing
- Performance testing in a selected test hole

Borehole Evaluation

- Tailor evaluation and sealing plan for each borehole
- Check for fill or obstructions
  - Compare actual conditions to drillers log
  - Remove tubing, packers, screens, junk, etc.
- Run down - hole camera (if possible)
- Conduct and integrate caliper log
  - Mechanical arm caliper, or
  - sonar caliper
- Modify and "fine tune" sealing plan