U.S. DEPARTMENT OF ENERGY
OFFICE OF CIVILIAN RADIOACTIVE WASTE MANAGEMENT

NUCLEAR WASTE TECHNICAL REVIEW BOARD
PANEL ON STRUCTURAL GEOLOGY & GEOENGINEERING

SUBJECT: FIELD TEST PLANS FOR THE REPOSITORY SEALING PROGRAM

PRESENTER: JOSEPH A. FERNANDEZ, P.E.

PRESENTER'S TITLE AND ORGANIZATION: SENIOR MEMBER OF TECHNICAL STAFF
SANDIA NATIONAL LABORATORIES
ALBUQUERQUE, NEW MEXICO

PRESENTER'S TELEPHONE NUMBER: (505) 844-2365

NOVEMBER 12-13, 1991

Purpose and Approach for Field Testing

Purpose

- Reduce uncertainties associated with
  - performance of sealing components
  - emplacement of sealing components
- Resolve Issue 1.12

SCP Approach--4 Steps

1. Evaluate what information is needed
   - site
   - seal performance
2. Evaluate the adequacy of the information
3. Define tests
4. Provide detailed definition of tests

Regulatory Basis for Testing

- Design Testing
  - 10 CFR 60.142 (a) During early or developmental stages, a program for in situ testing of . . . borehole and shaft seals, backfill, rock, and the thermal interaction effects . . .
    (b) Test . . . as early as practicable.
    (c) Backfill test . . . effectiveness of placement and compaction procedures . . .
    (d) Test sections . . . effectiveness of borehole and shaft seals before full-scale emplacement of seals.
- Performance Criteria
  - 10 CFR 60.112
- General Criteria
  - 10 CFR 60.134

Testing Program

Category A Intrinsic permeability of discrete, geologic features

- Ghost Dance fault (major features)
- Fault beneath alluvium (surface to subsurface)
- Fracture within Topopah Spring (categorization possible?)

Category B Evaluation of specific sealing concepts and sealing components

Numerical Analysis + Laboratory Test

supports

Field Testing

Numerical Analyses for Planning Small-, Intermediate-, and Large-Scale Seal Tests

- Steady-state water flow through plugs
  - Darcy's Law is applicable
  - Parallel flow through the interface, modified permeability, and seal zones
  - Broad range of conditions evaluated
- Hydration calculations to determine interface stress
  - SHAFT.SEAL model is applicable
  - Variations in seal size, rock temperature, and placement temperature evaluated
- Water flow through an inclined embankment

Laboratory Testing to Support Seal Tests

For earthen materials (clays, rockfill)

- Density-water content relation
- Particle gradation
- Hydraulic conductivity related to density
- Swelling capacity related to density

For cementitious materials

- Density
- Heat of hydration
- Slump, viscosity
- Workability
- Set time and working time
- Maximum particle size of aggregate phases

Technical Basis

- Performance Uncertainties
  - Hydrologic
  - Structural
  - Thermal
  - MPZ propagation
  - Fines migration
- Emplacement Uncertainties
  - Liner removal
  - Grout placement
  - Workability
  - Casing removal

PROPOSED ACTION

APPROACH USED TESTS

FACILITY REQUIRED

Comprehensive List of Proposed Tests

Seal Component Tests

- Small-scale in situ tests*
- Intermediate borehole tests
- Fracture grouting tests
- Surface backfill tests
- Heated block/grout test

Seal System Tests

- Filter/single embankment tests*
- Backfill tests
- Bulkhead tests
- Large-scale shaft seal tests*
- Remote borehole sealing tests*

*Minimum tests proposed

Common Objectives

- Demonstrate placement of sealing components using current technologies
- Determine effectiveness of testing instrumentation
  - range
  - sensitivity
  - accuracy
- Develop quality control procedures for placement
- Establish reliability of seal system
  - anticipated conditions
  - unanticipated conditions

Potential Testing Areas

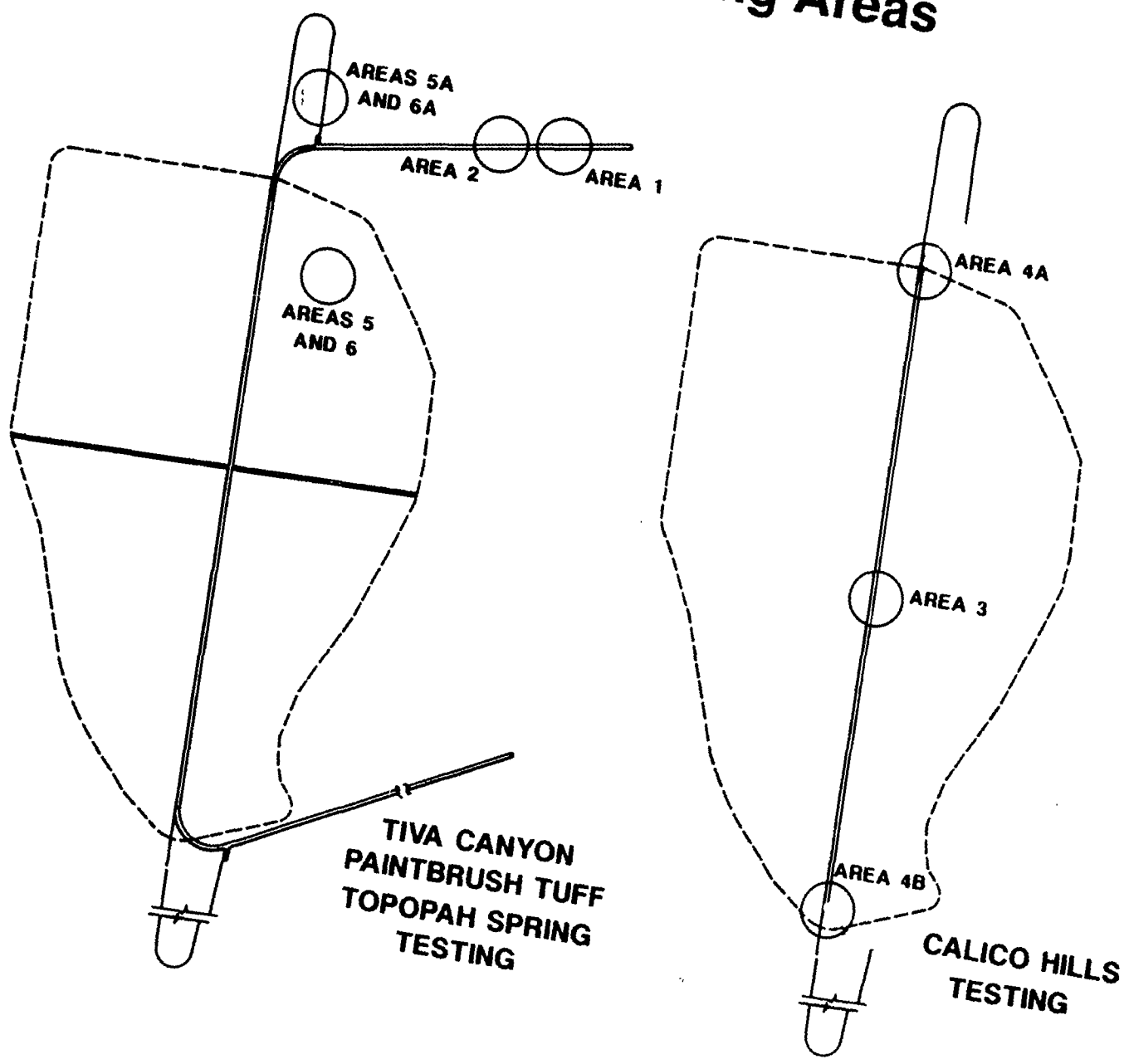

3-D Picture of a Conceptual Test Facility

Small-Scale In Situ Test

Objective

Characterize thermal and stress response of hydration of grout in welded and nonwelded tuff

- **18" and 36" diameter holes**
- **All at L = D, 2D**

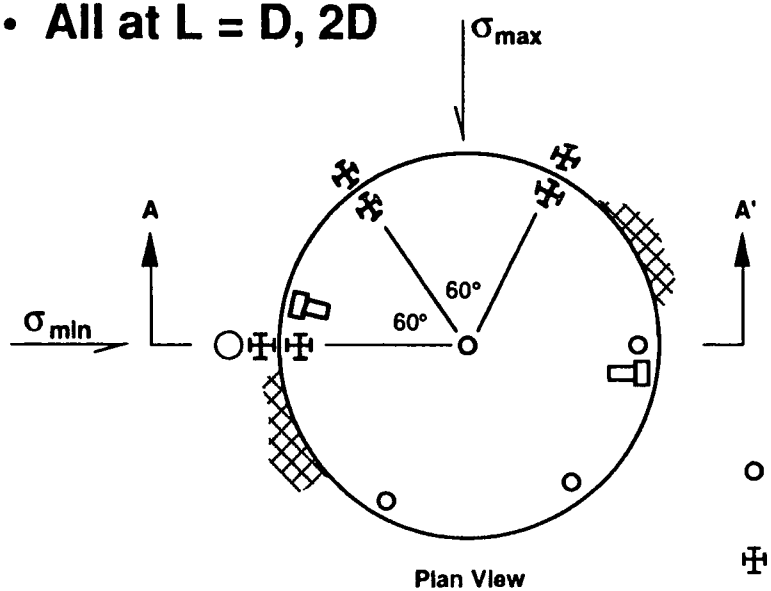

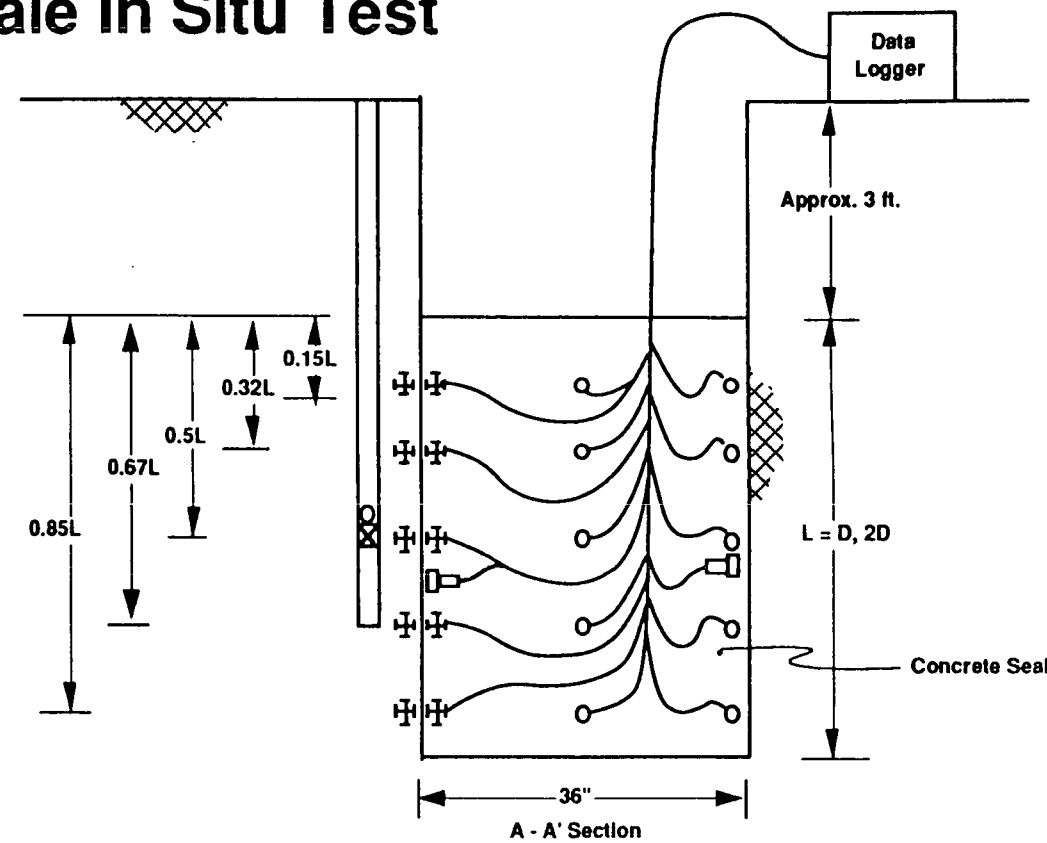

36-inch Seal Test - NonWelded

Legend

- Thermocouple Radial and Circumferential
- Strain Gage
- Concrete Stress Meter
- Rock Displacement Gage

Picture of WIPP Small-Scale Seal Performance Test

Summary of Parameters

Hydration Analysis
Seal Location PTn1/TSw1

PARAMETER	UNITS	BOREHOLES	SHAFTS
SEAL SIZE	m	0.30 and 0.61	1.52 and 3.05
ULTIMATE YOUNG'S MODULUS	MPa	6890	6890
POISSON'S RATIO		0.2	0.2
THERMAL EXPANSION	(1/°C)	12.6×10^{-6}	1.26×10^{-5}
THERMAL CONDUCTIVITY	(J/m•day•°C)	259,200	259,200
SPECIFIC HEAT	(J/kg•°C)	962.8	962.8
ULTIMATE VOLUMETRIC EXPANSION*	%	0.03	0.03

*Volumetric expansion is approximated by three times the linear expansion. Also, volumetric expansive effects will be calculated starting at time zero.

Influence of Seal Size on Interface Stress

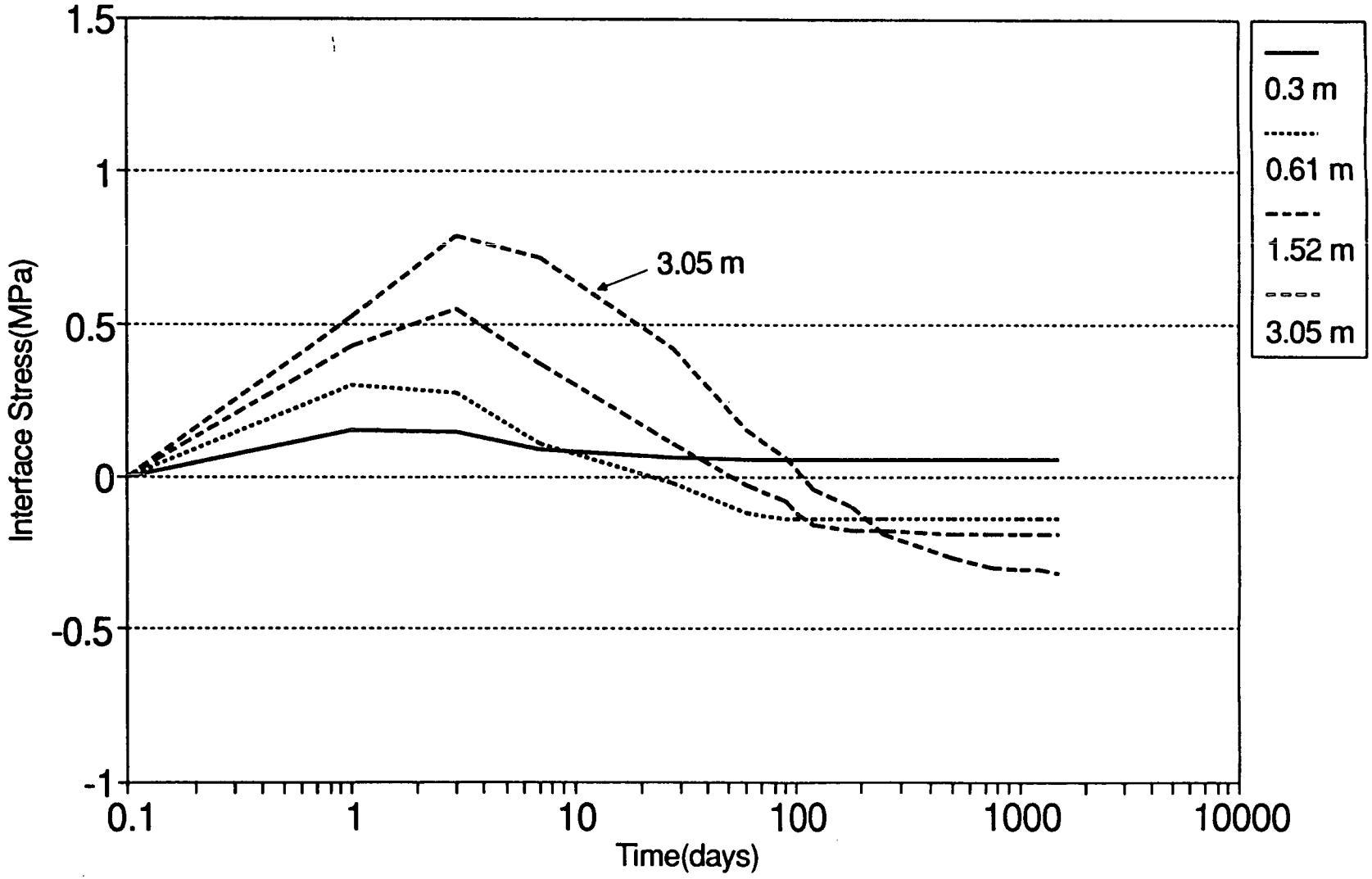

Influence of Seal Size on Temperature

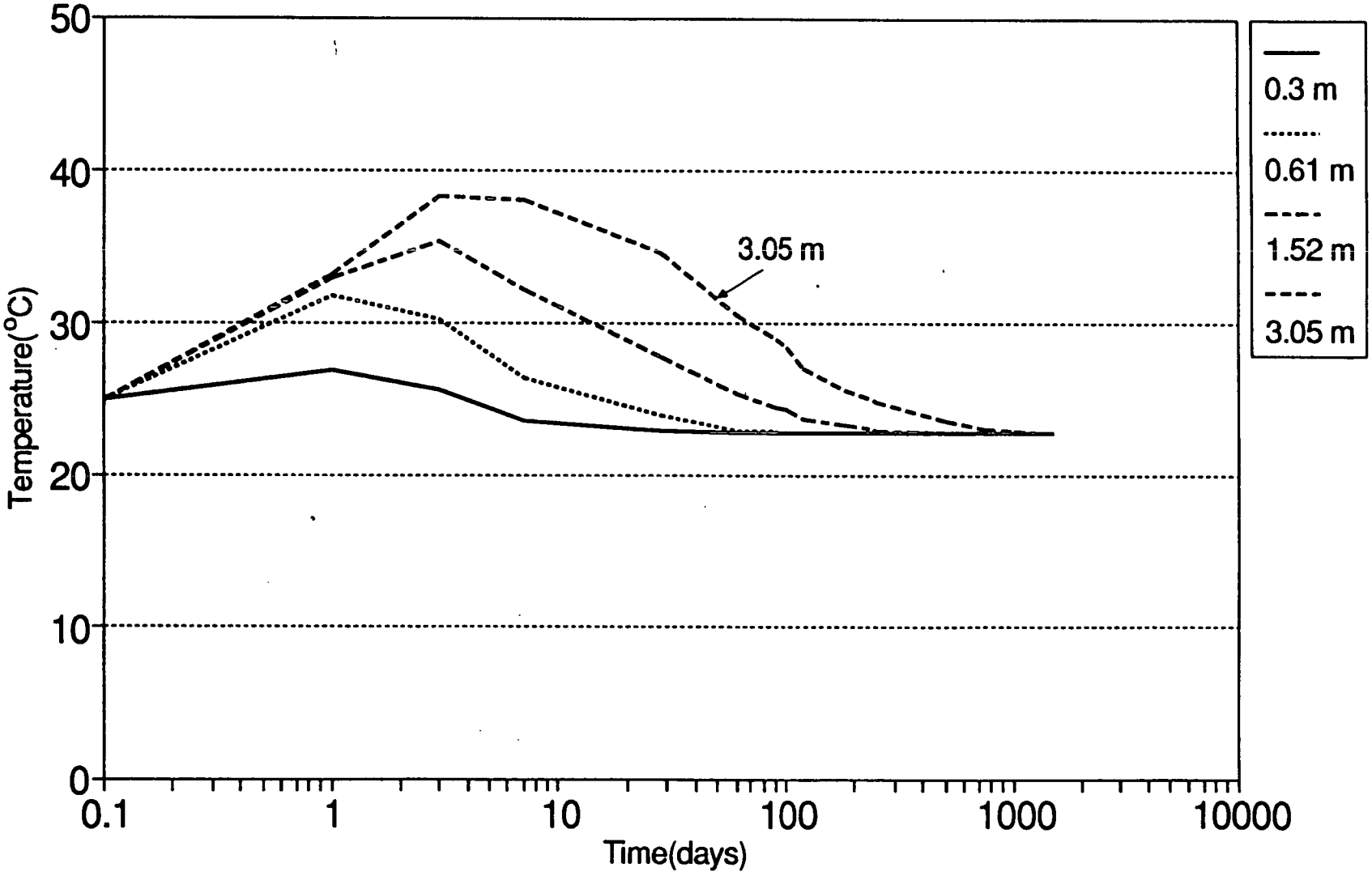

Intermediate Borehole Seal Tests

Objective

Characterize hydrologic performance of borehole seal

- **Nonwelded Paintbrush tuff**
- **Welded Topopah Spring tuff**

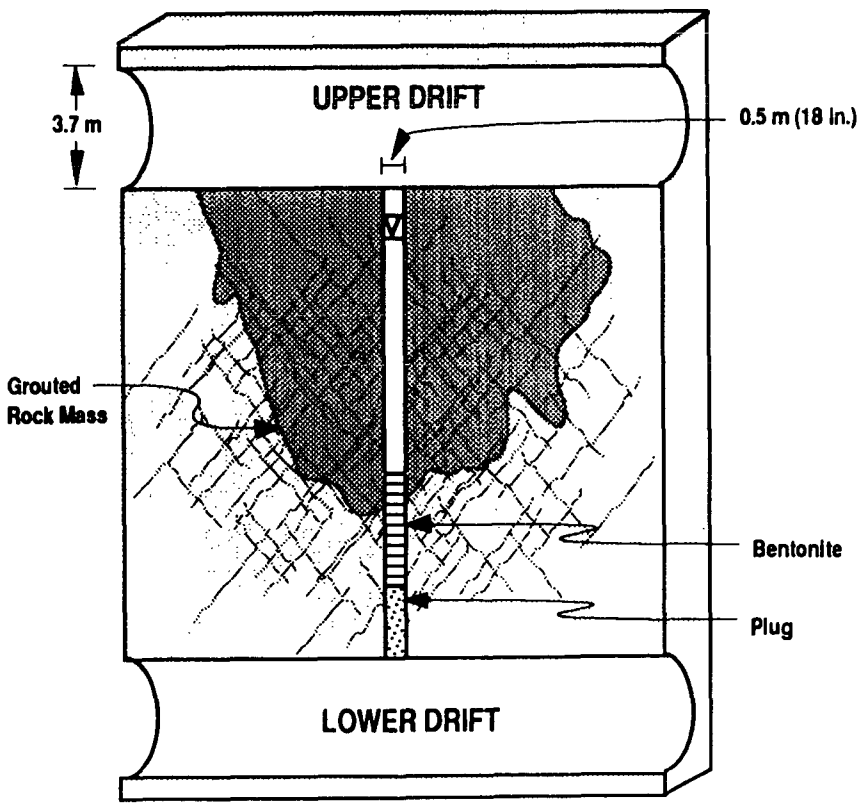

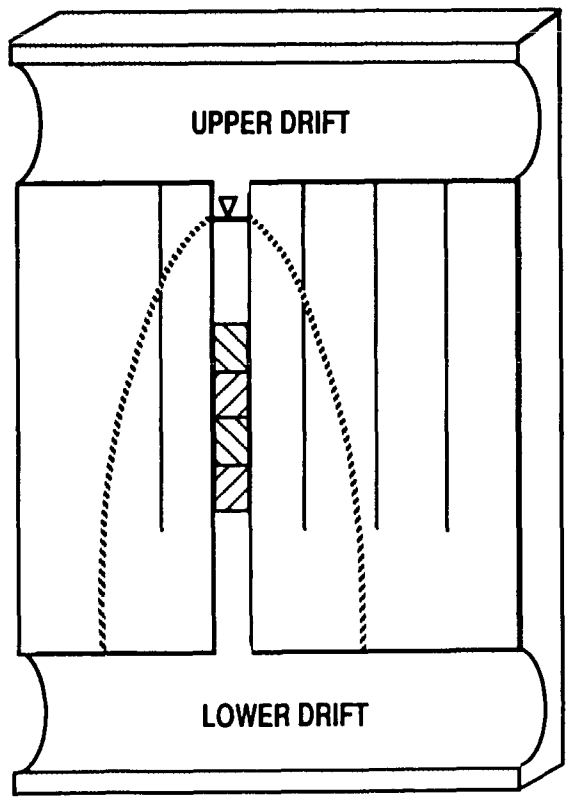

Summary of Parameters Used in Steady-State Flow Analysis

PARAMETER	UNITS	BOREHOLES			SHAFTS		
		BEST-CASE VALUES	MIDDLE-CASE VALUES	WORST-CASE VALUES	BEST-CASE VALUES	MIDDLE-CASE VALUES	WORST-CASE VALUES
INTERFACE PERMEABILITY	m^2	8.33×10^{-14}	8.33×10^{-12}	8.33×10^{-10}	8.33×10^{-14}	8.33×10^{-12}	8.33×10^{-10}
CHANGE IN PRESSURE	MPa	0.07	0.7	1.2	0.01	0.1	0.1
PLUG LENGTH	m	10	5	0.5	5.5	5.5	5.5
MPZ FACTOR	--	1	7.5	15	20	20	20
ROCK PERMEABILITY	--	1×10^{-14}	1×10^{-12}	1×10^{-11}	1×10^{-14}	1×10^{-12}	1×10^{-11}
POROSITY OF MPZ	%	0.02	0.2	2.0	0.02	0.2	2.0

Steady-State Flow

Flow Rate vs. Borehole Permeability

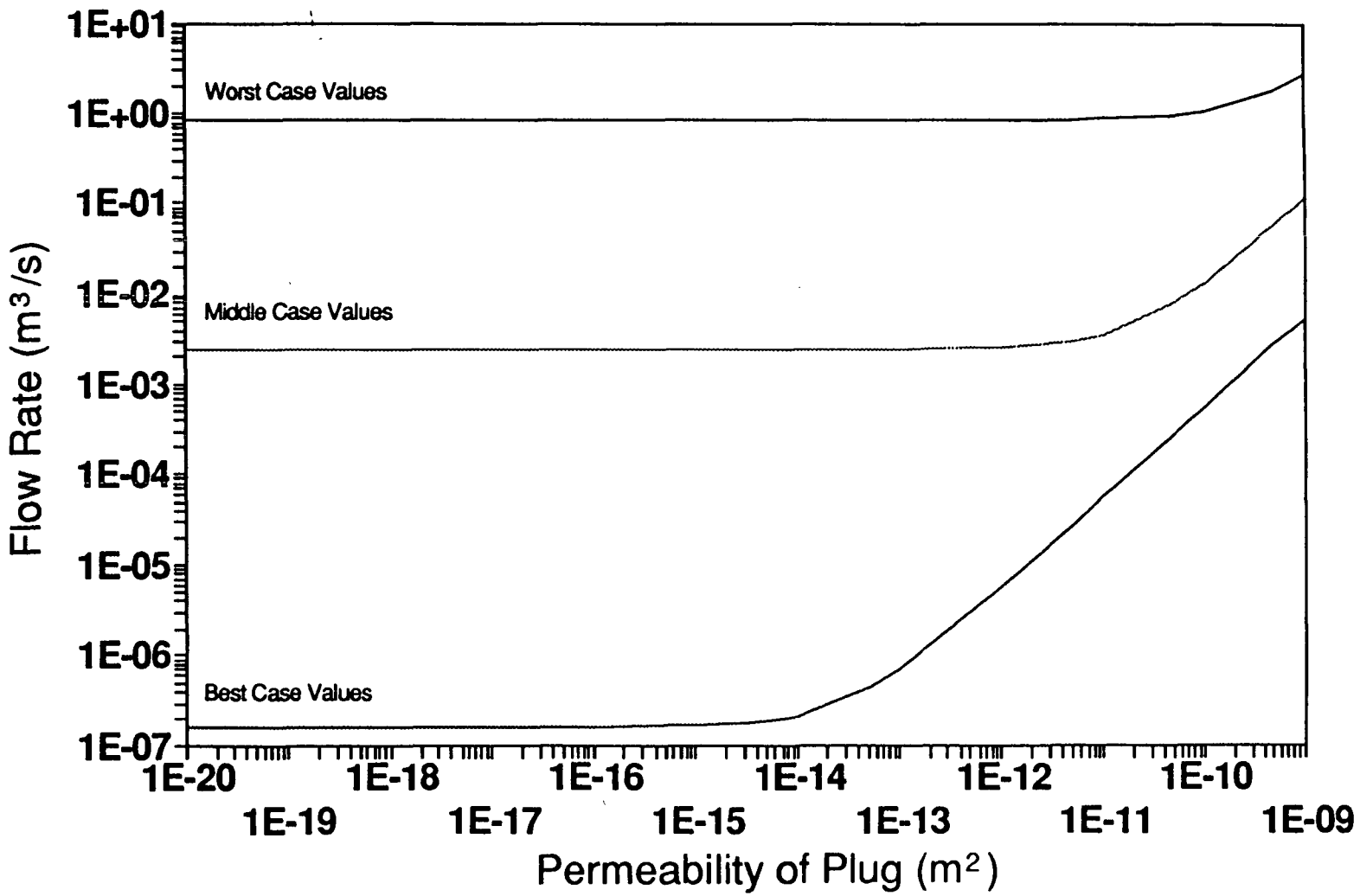

Remote Borehole Sealing Test

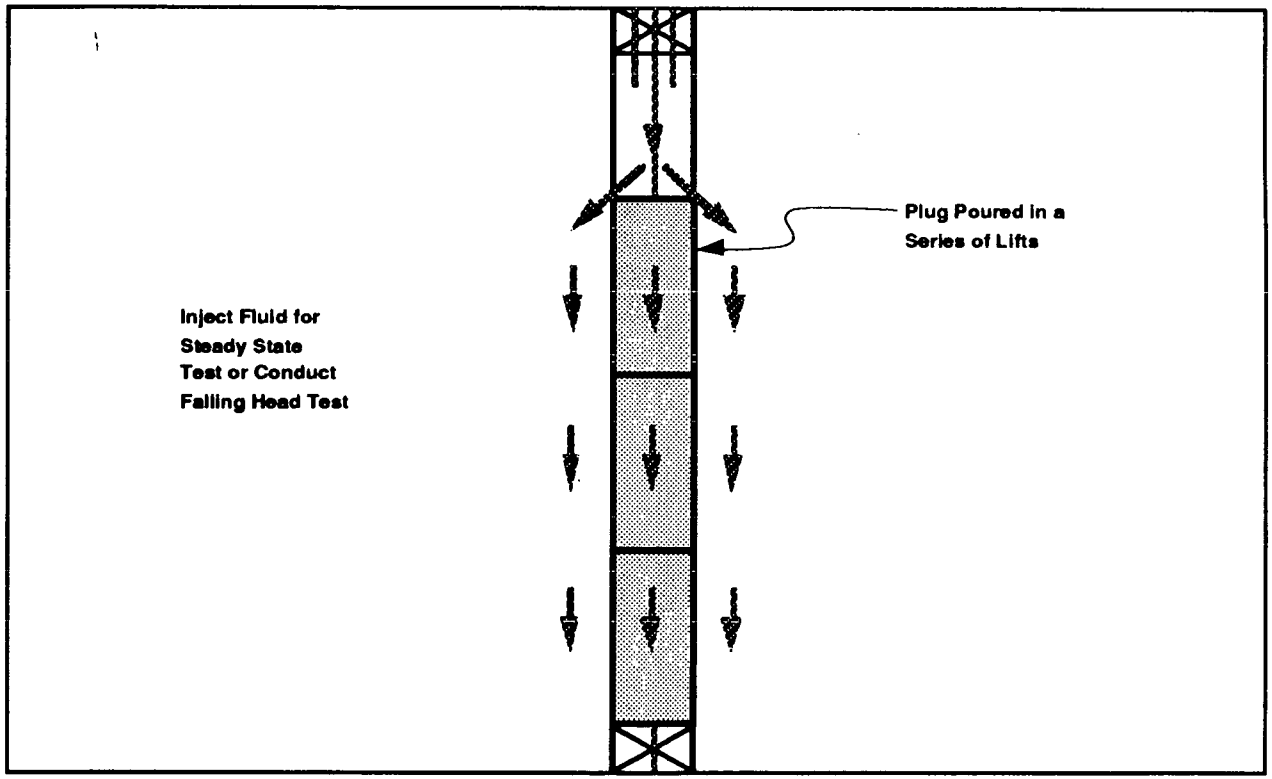

Objective

Understand the hydrologic performance of borehole seals in the Paintbrush nonwelded, the Topopah Spring Member, and the Calico Hills unit

Fracture Grouting Test

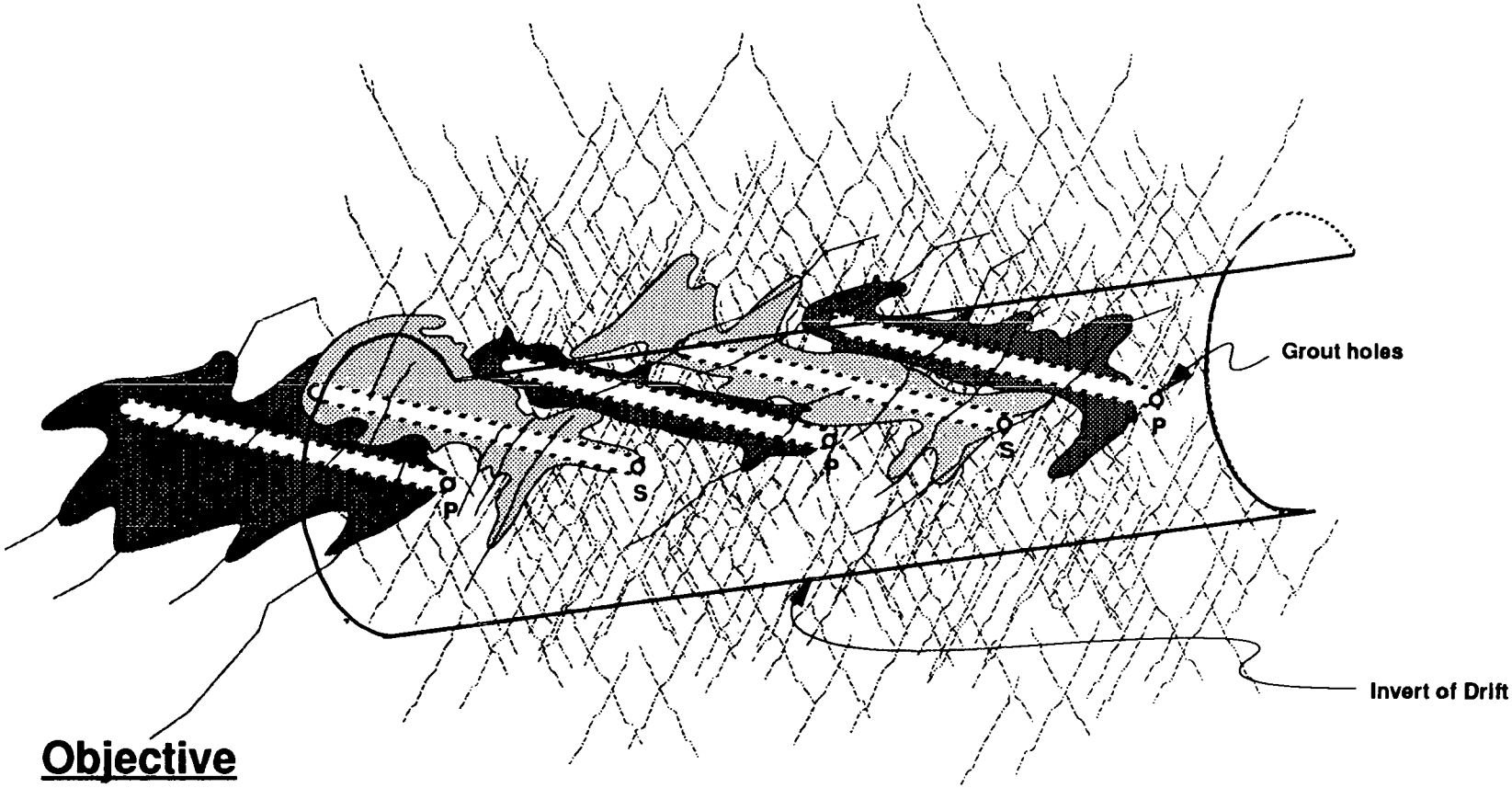

Objective

Understand the hydrologic effectiveness of grout penetration in a number of different fractured environments

Heated Block/Grout Tests

Objective

Assess the thermal effects on the permeability of a fractured rock mass and the thermal effects on a fractured rock mass that is grouted

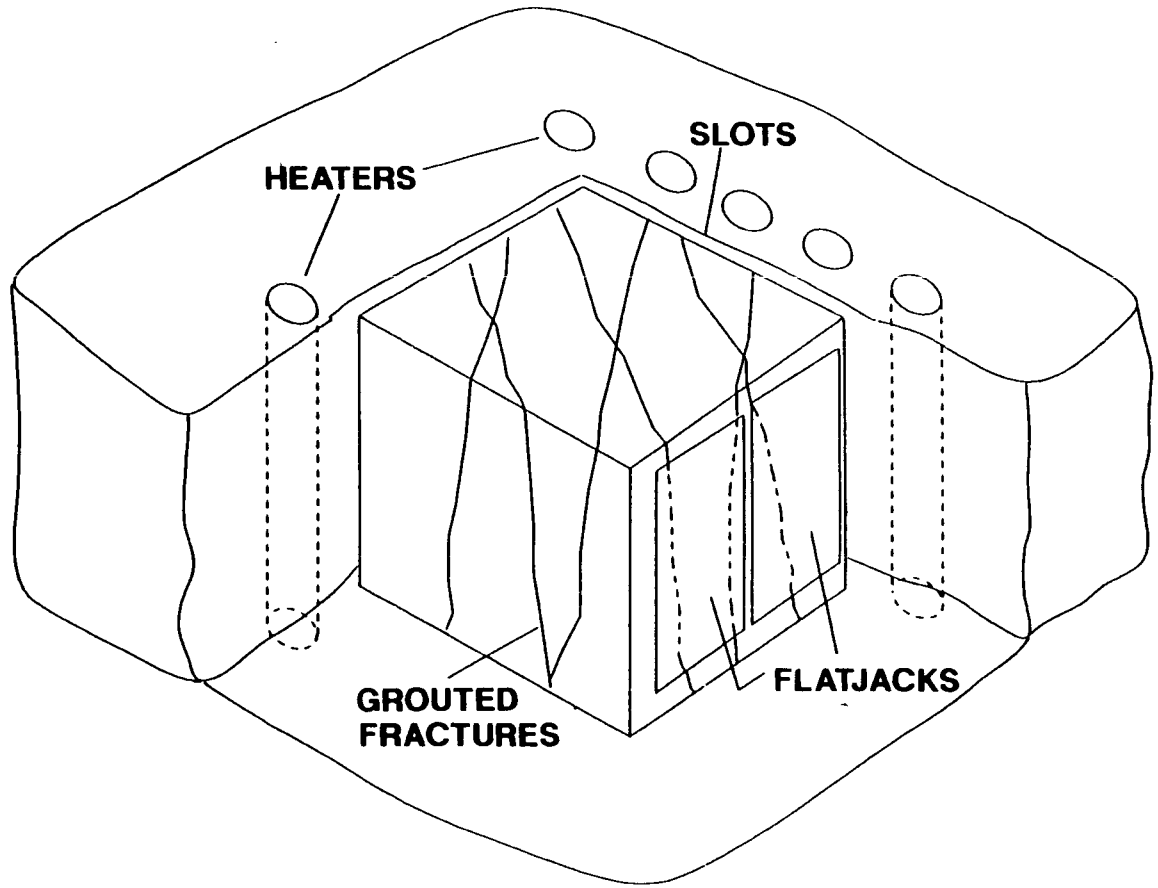

Small-Scale In Situ Test

Objective

Characterize thermal and stress response of hydration of grout in welded and nonwelded tuff

- **18" and 36" diameter holes**
- **All at L = D, 2D**

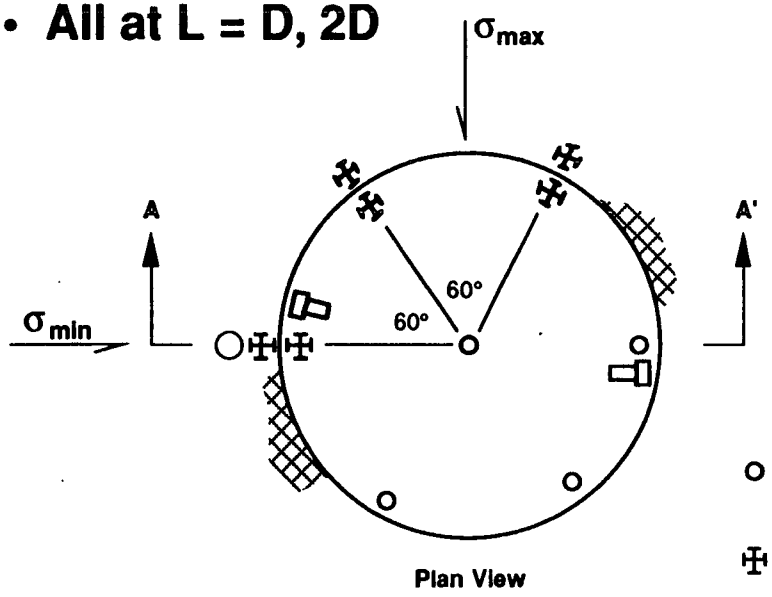

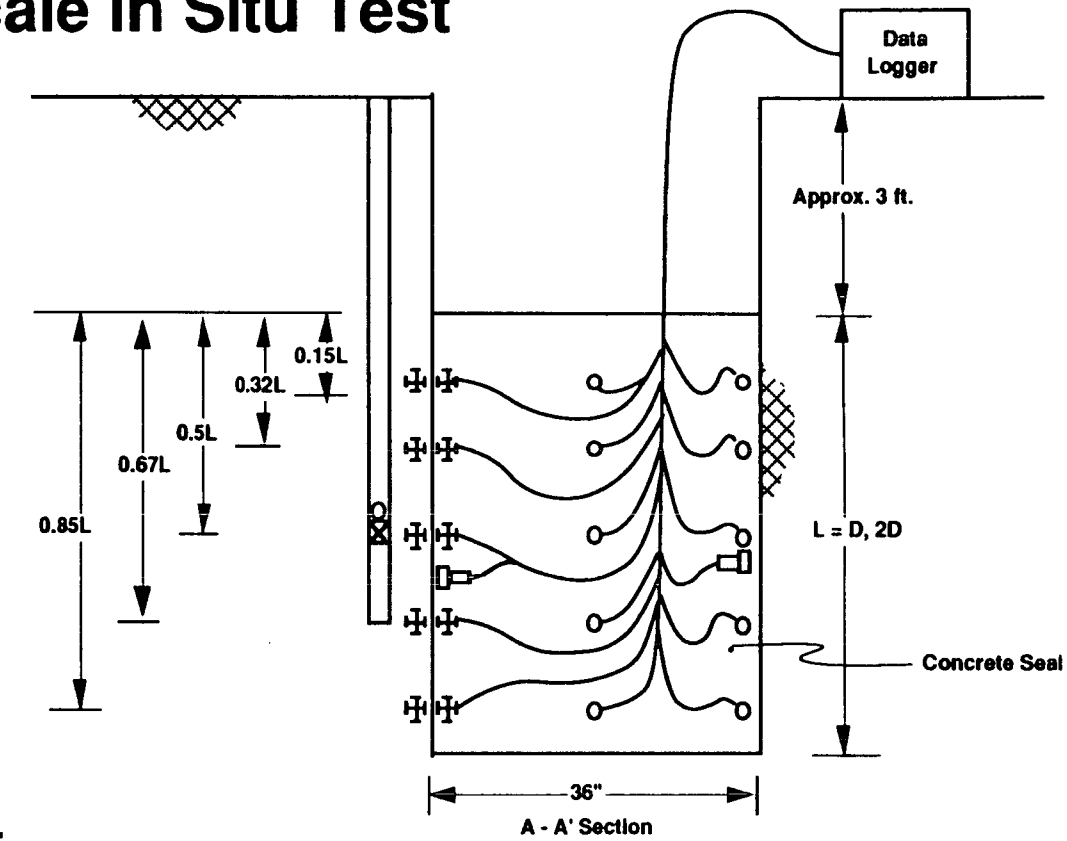

36-inch Seal Test - NonWelded

Legend

- Thermocouple Radial and Circumferential
- Strain Gage
- Concrete Stress Meter
- Rock Displacement Gage

Filter/Single Embankment Test

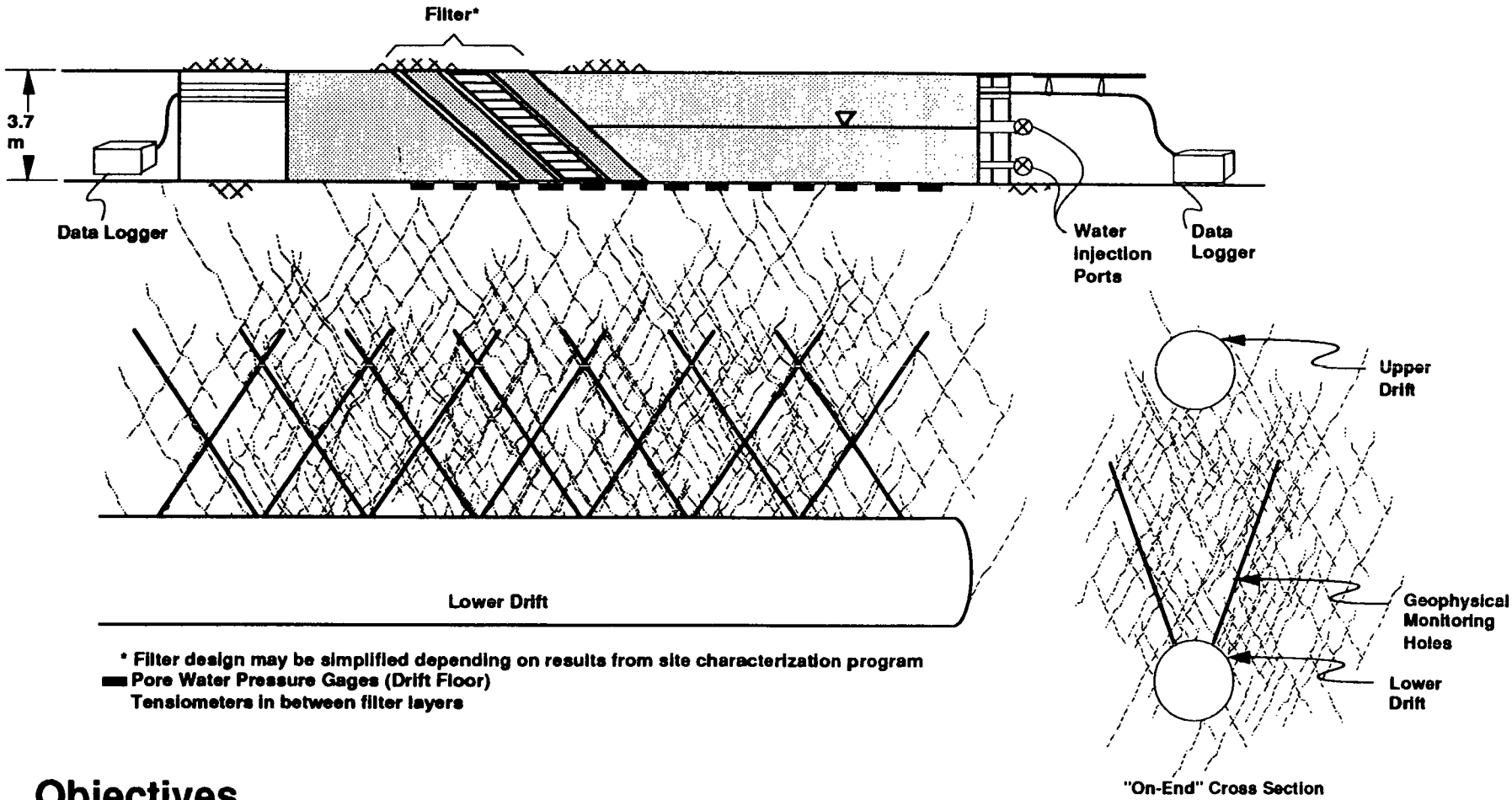

Objectives

- Understand hydrologic performance of drift fill and filter designs and drainage through rock
- Understand potential migration of fines and potential clogging of fractures
- Establish effectiveness of drainage enhancement

Large-Scale Shaft Seal Tests

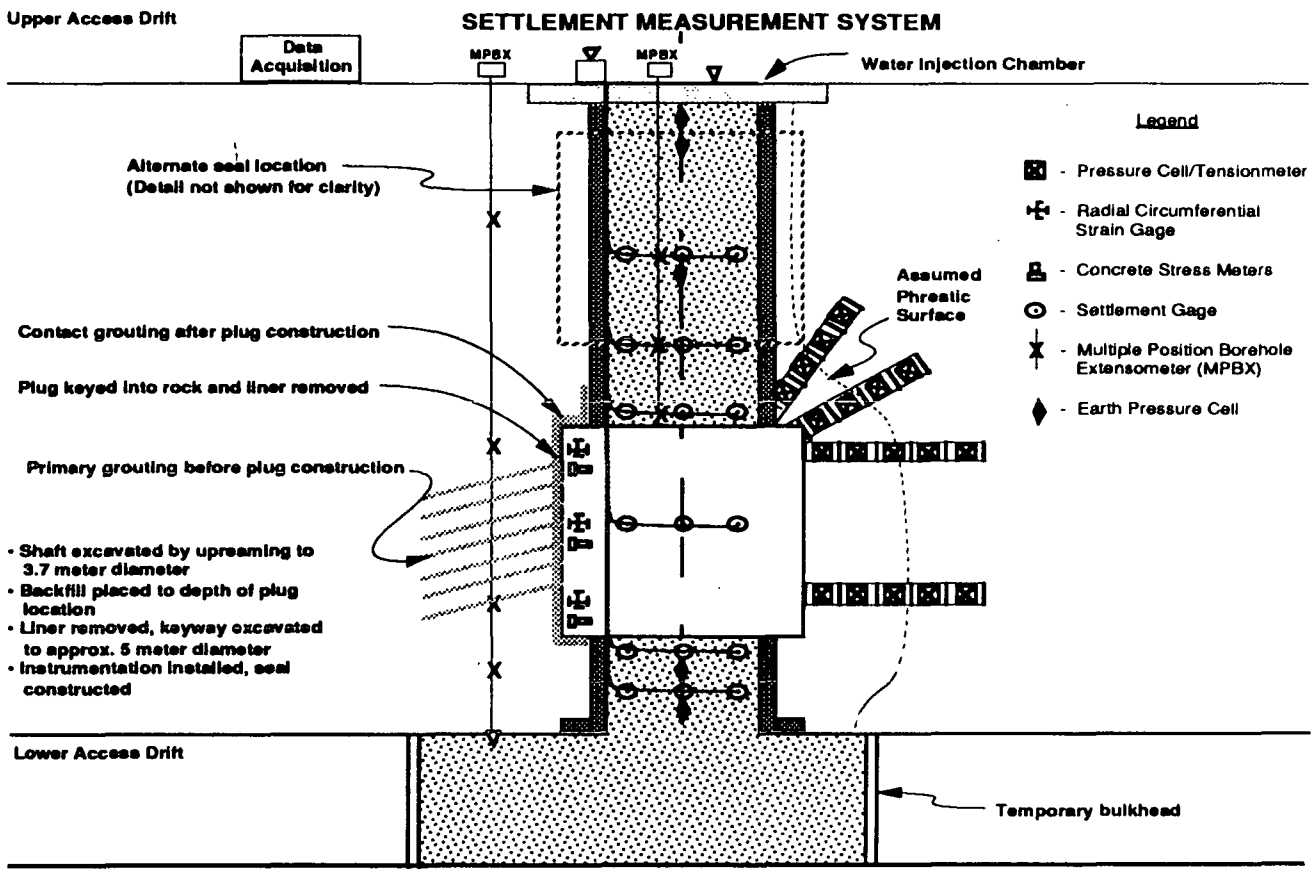

Objective

- Characterize the hydrologic performance of rigid shaft seals in nonwelded and welded tuff
- Characterize the hydrologic performance and consolidation behavior of rockfill (nonwelded and welded)

Backfill Tests in Calico Hills Unit

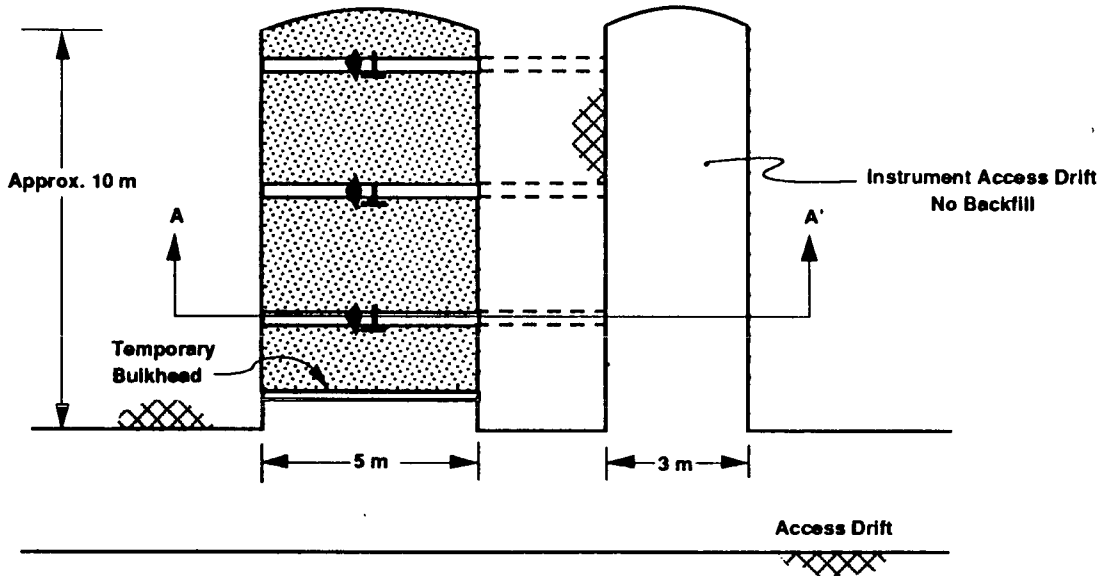

Plan View

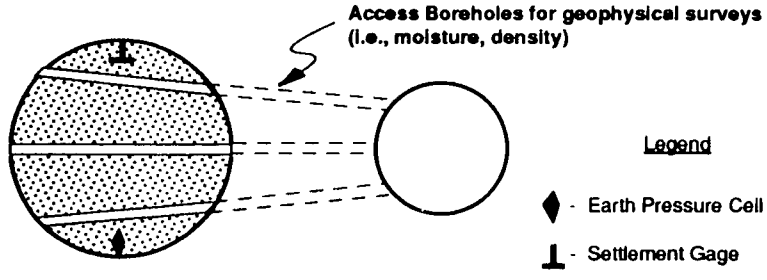

A - A' Section

Objective

Characterize the structural and hydrologic performance of various rockfill materials in situ

Surface Backfill Tests

Objectives

- Establish consolidation behavior and preliminary understanding of flow through drift and shaft fill
  - Nonwelded rockfill
  - Welded rockfill
- Correlate achievable backfill properties with emplacement techniques