U.S. DEPARTMENT OF ENERGY
OFFICE OF CIVILIAN RADIOACTIVE WASTE MANAGEMENT

PRESENTATION TO
THE NUCLEAR WASTE TECHNICAL REVIEW BOARD

SUBJECT: INTRODUCTION

PRESENTER: DR. LESLIE J. JARDINE

PRESENTER'S TITLE: NUCLEAR ENGINEER
AND ORGANIZATION: LAWRENCE LIVERMORE NATIONAL LABORATORY
LIVERMORE, CALIFORNIA 94550

PRESENTER'S
TELEPHONE NUMBER: (415) 423-5032

JANUARY 18-19, 1990

Scope of presentation

- Introductory Remarks
- Organizational Summary
- Reference Waste Package Configurations
- Reference Underground Configuration

YUCCA MOUNTAIN PROJECT

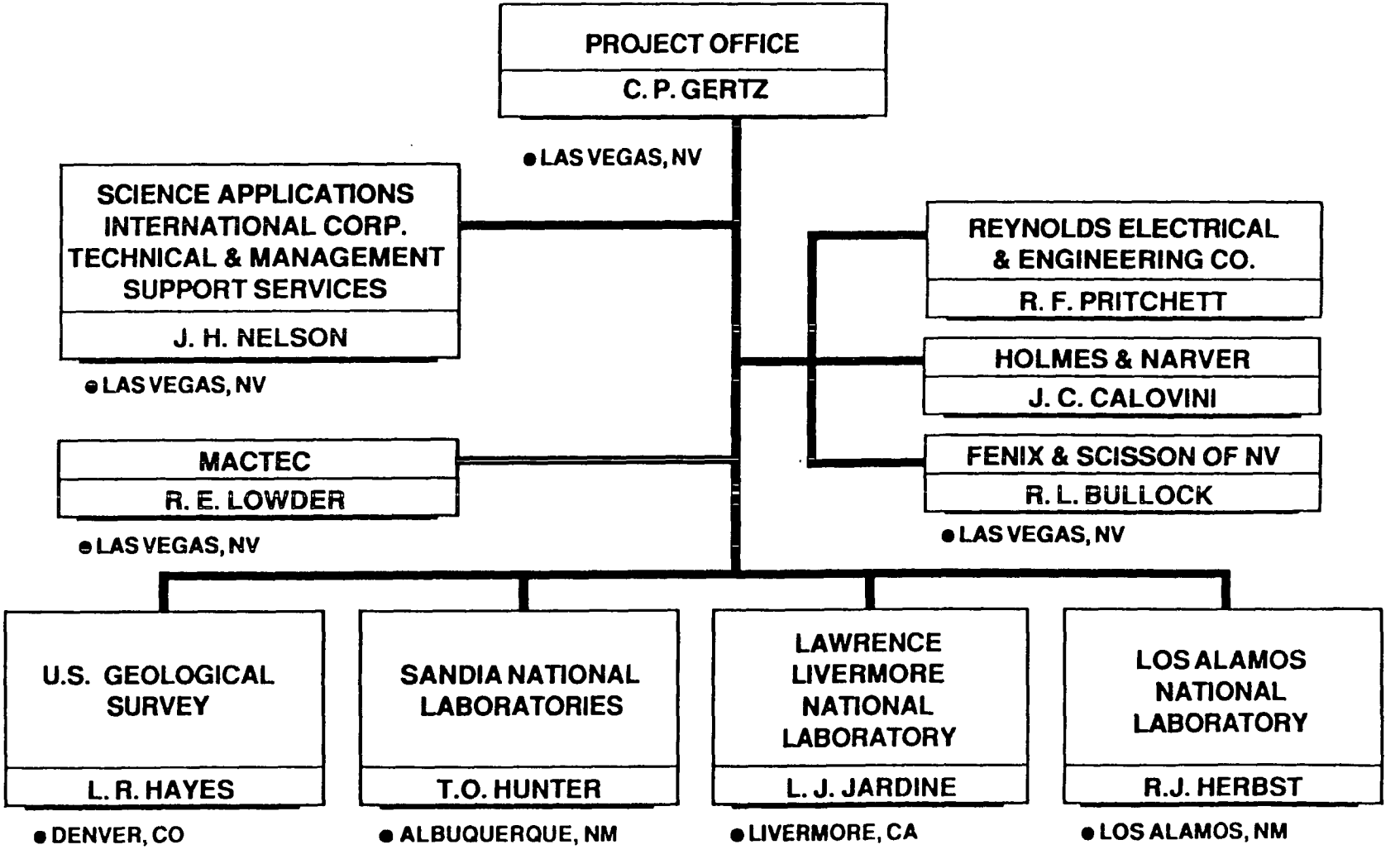

QACG.CPG/10-16-89

LLNL Organizational Summary

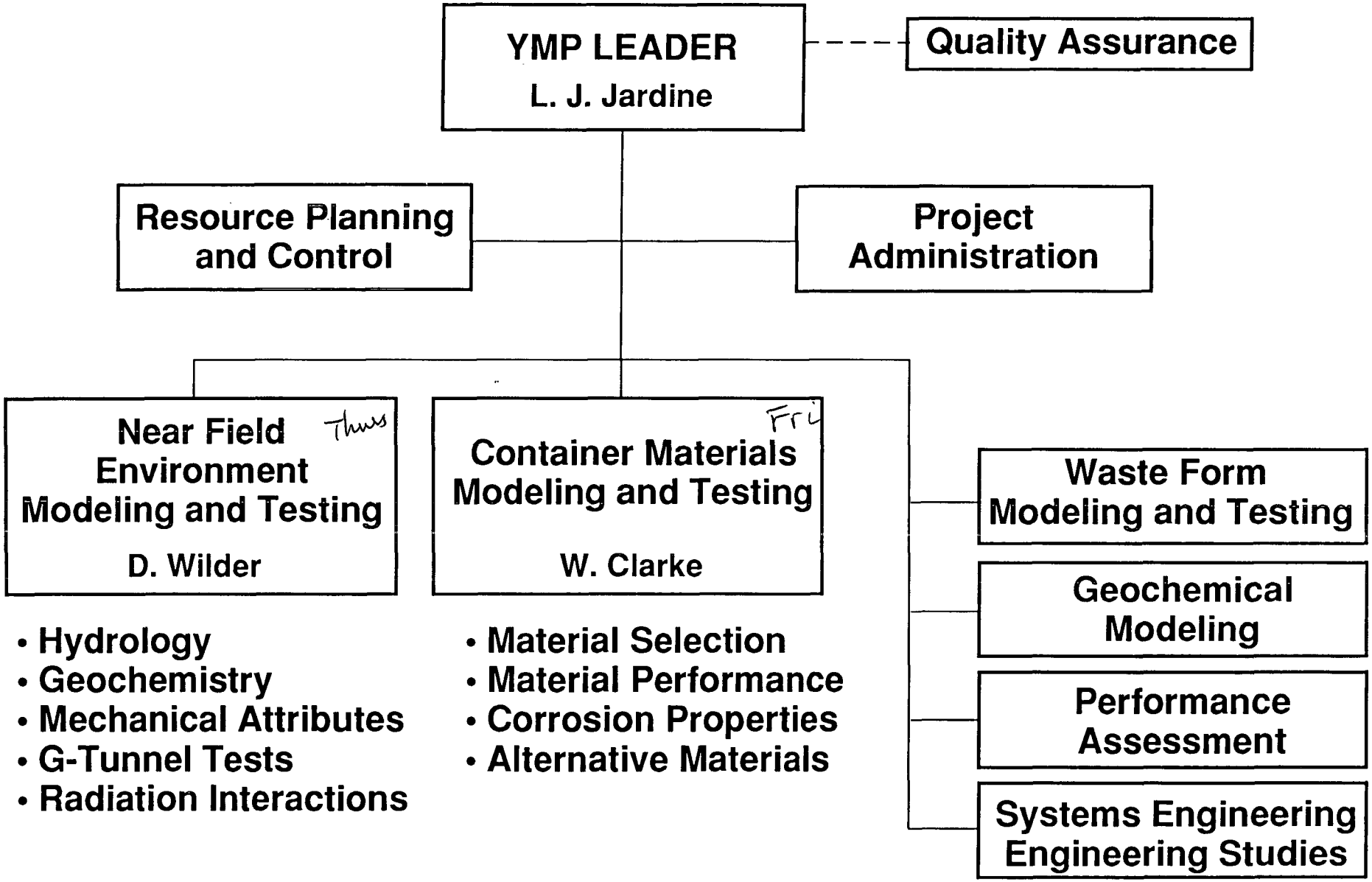

- Hydrology
- Geochemistry
- Mechanical Attributes
- G-Tunnel Tests
- Radiation Interactions

- Material Selection
- Material Performance
- Corrosion Properties
- Alternative Materials

ES-1/8/90-LJ-001a

TUFF REPOSITORY PERSPECTIVE

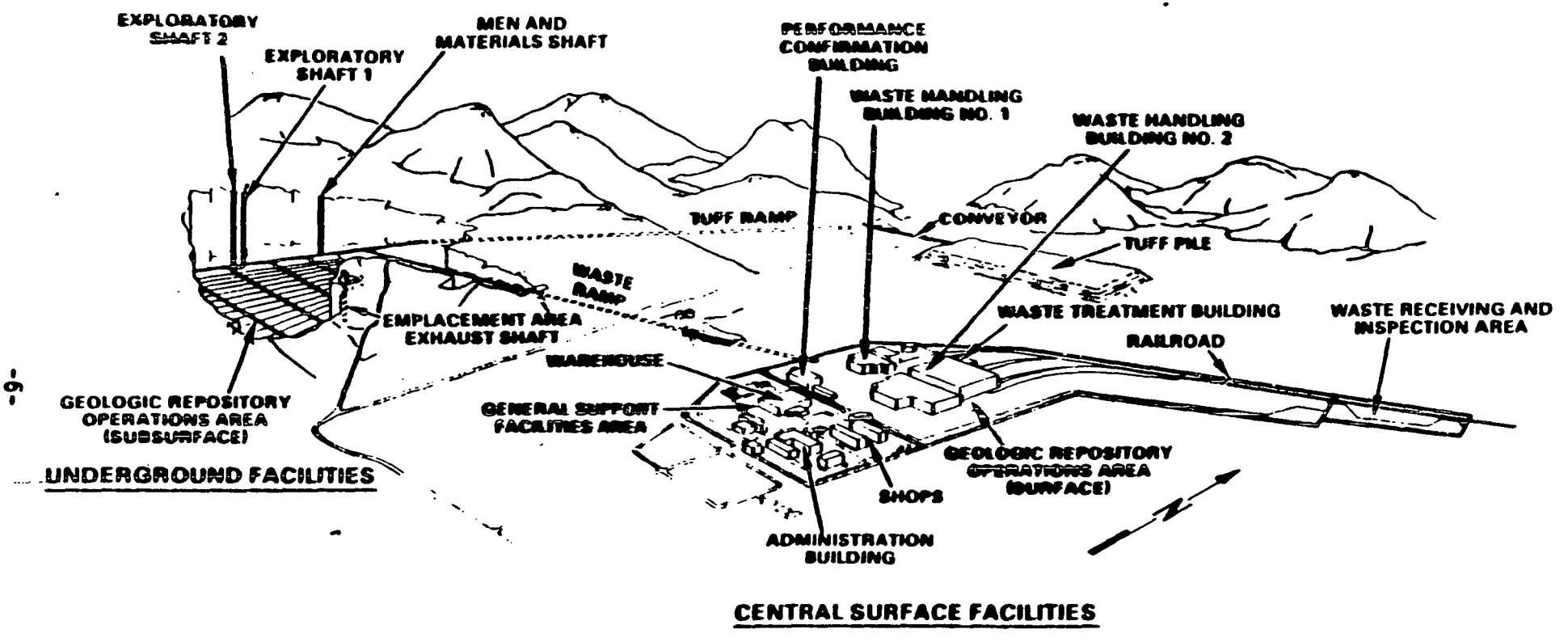

FIGURE 2

Repository background

- Annual repository throughput
  - 3000 MTU spent fuel
  - 400 MTU HLW
- Total storage capacity: 70,000 MTU
  - 63,020 MTU spent fuel
  - 6,980 MTU HLW
- Total number containers (approximate)
  - 25,000 to 35,000 spent fuel
  - 14,000 HLW

Underground repository configuration

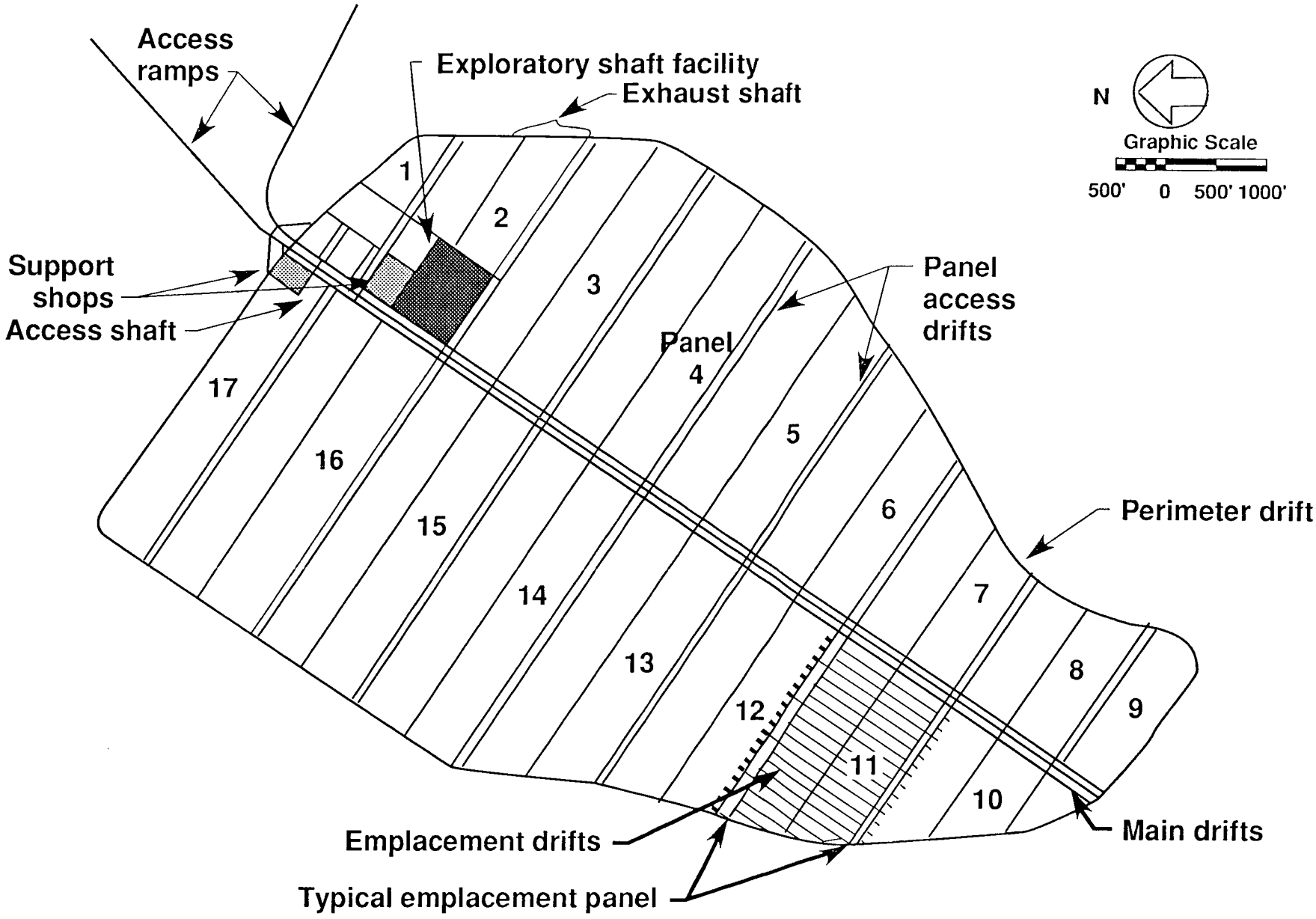

ES-01/03/90-LJJ#11-05

Underground repository configuration

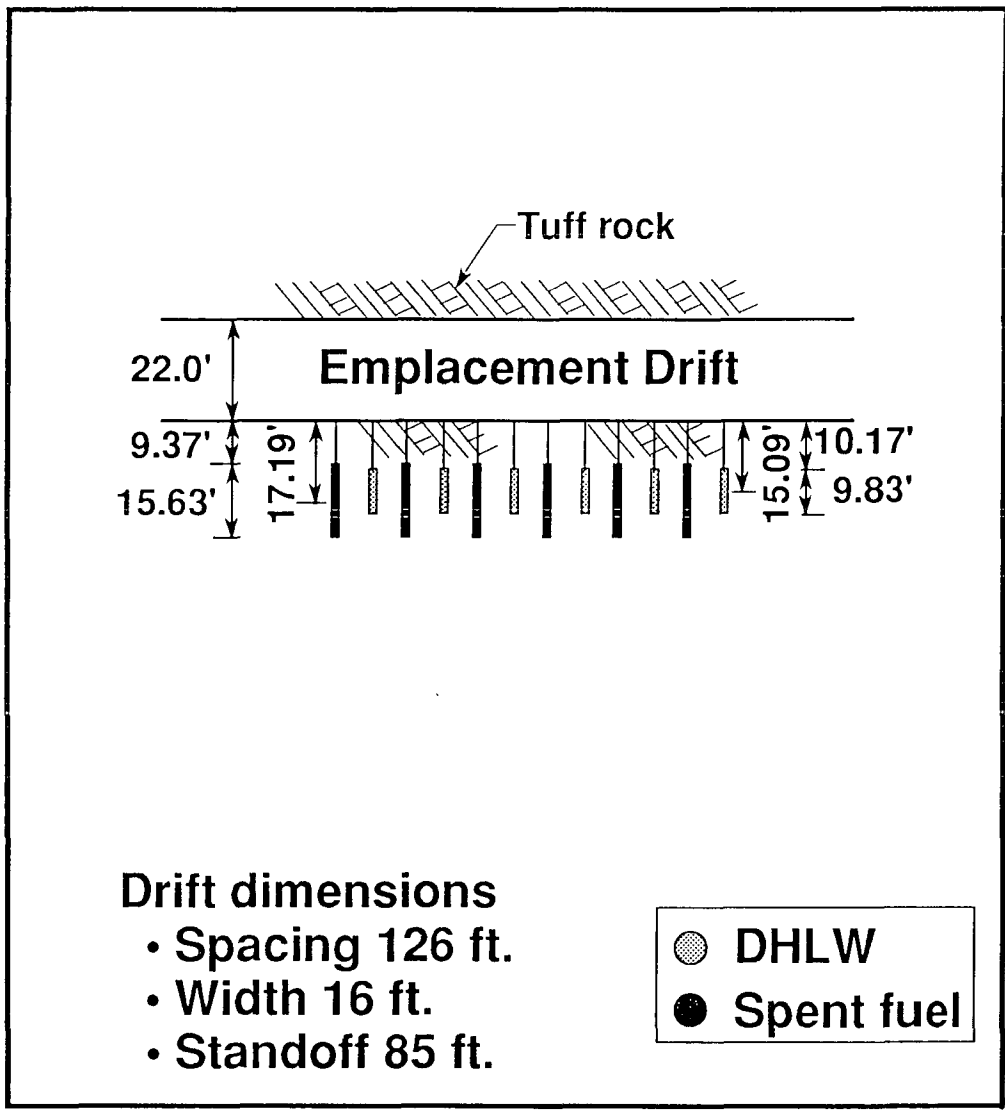

Emplacement drift section

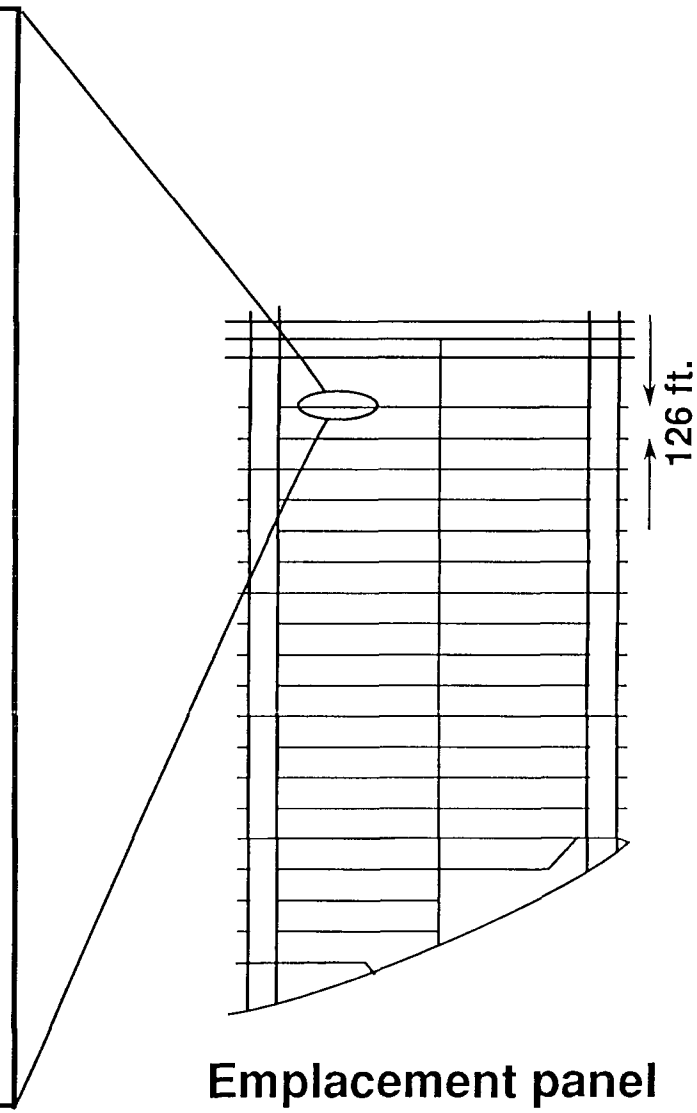

Emplacement panel

ES-01/03/90-LJJ#11-02

Two types of waste packages will be placed in the repository at Yucca Mountain

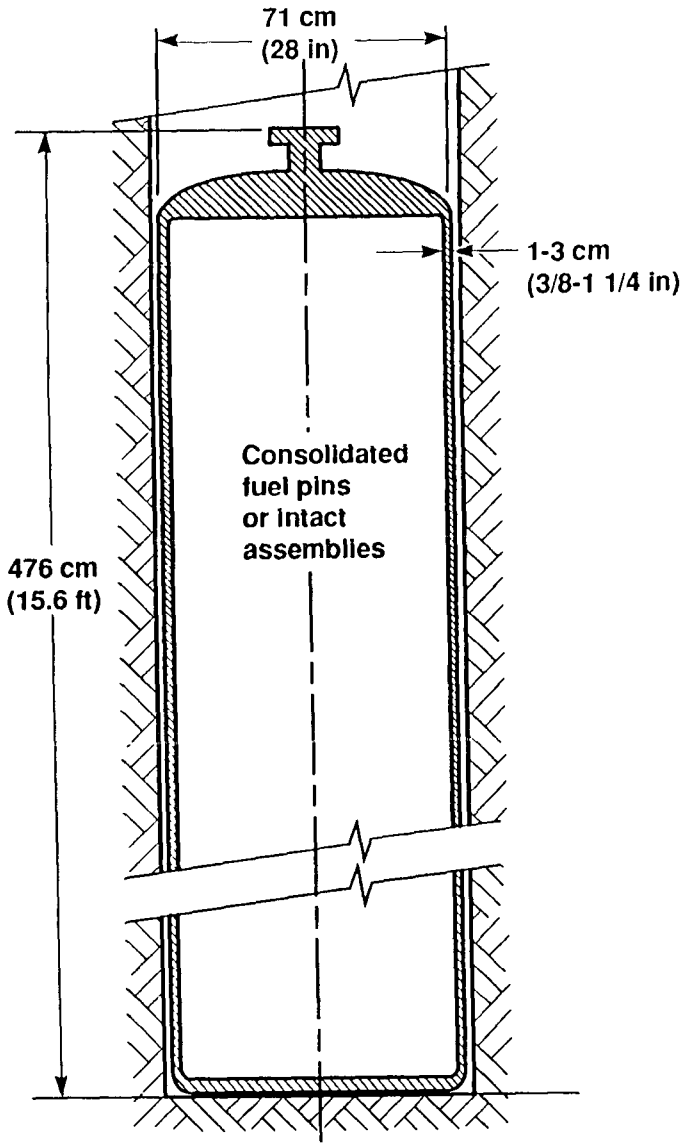

Spent fuel containers
(25,000 to 35,000)

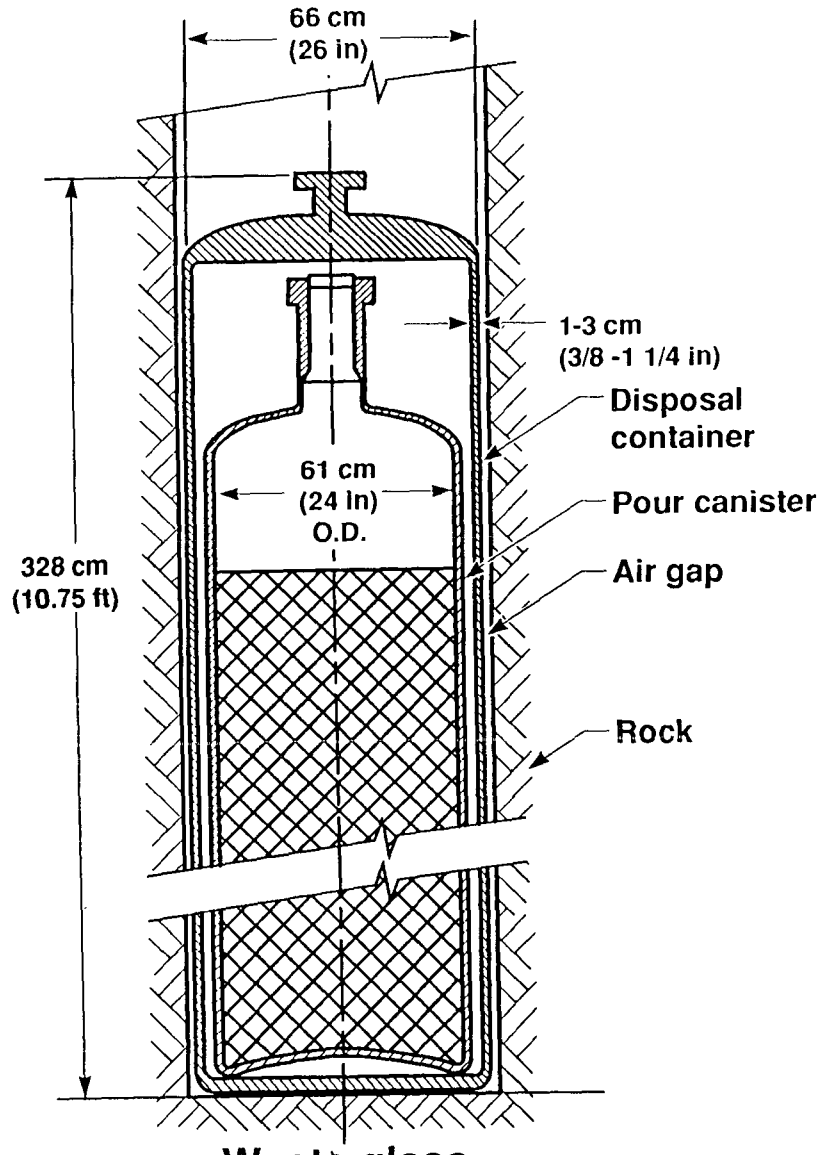

Waste glass
containers (~14,000)

Reference configuration for vertical placement

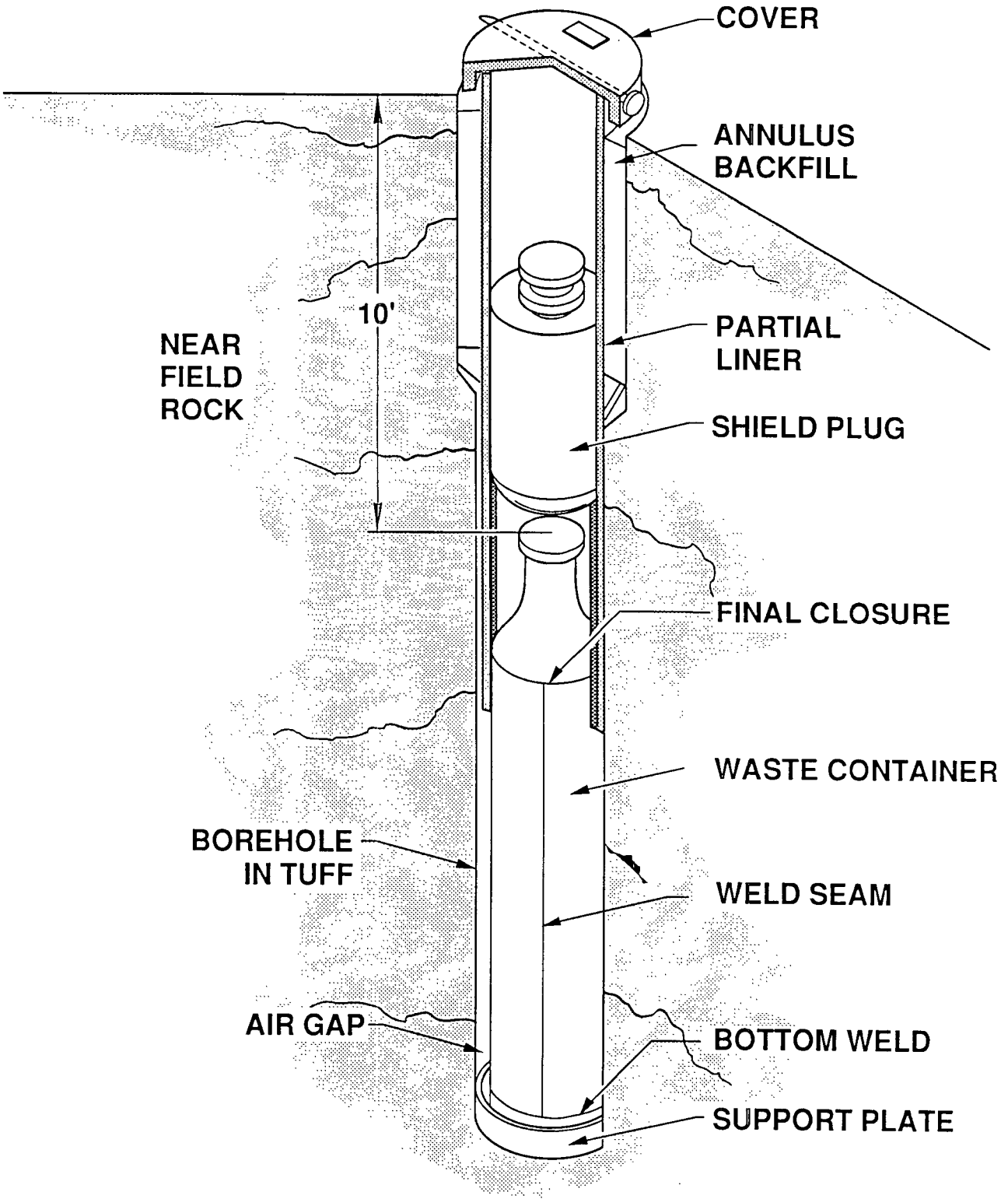

MX-010-U-7504/F 1