U.S. DEPARTMENT OF ENERGY
OFFICE OF CIVILIAN RADIOACTIVE WASTE MANAGEMENT

PRESENTATION TO
THE NUCLEAR WASTE TECHNICAL REVIEW BOARD

SUBJECT: WASTE PACKAGE CONTAINERS

PRESENTER: WILLIS L. CLARKE

PRESENTER'S TITLE: AND ORGANIZATION: METALLURGICAL ENGINEER
LAWRENCE LIVERMORE NATIONAL LABORATORY
LIVERMORE, CALIFORNIA 94550

PRESENTER'S TELEPHONE NUMBER: (415) 423-4803

JANUARY 18-19, 1990

Objectives of Container Materials Modeling and Testing

- Select a material and fabrication process for Yucca Mountain waste package containers.
- Identify the most likely modes of container failure after emplacement.
- Develop models for prediction of container lifetime.
- Perform materials testing required to develop and confirm the models.
- Provide models and supporting data in a form useable for Performance Assessment.

Two types of waste packages will be placed in the repository at Yucca Mountain

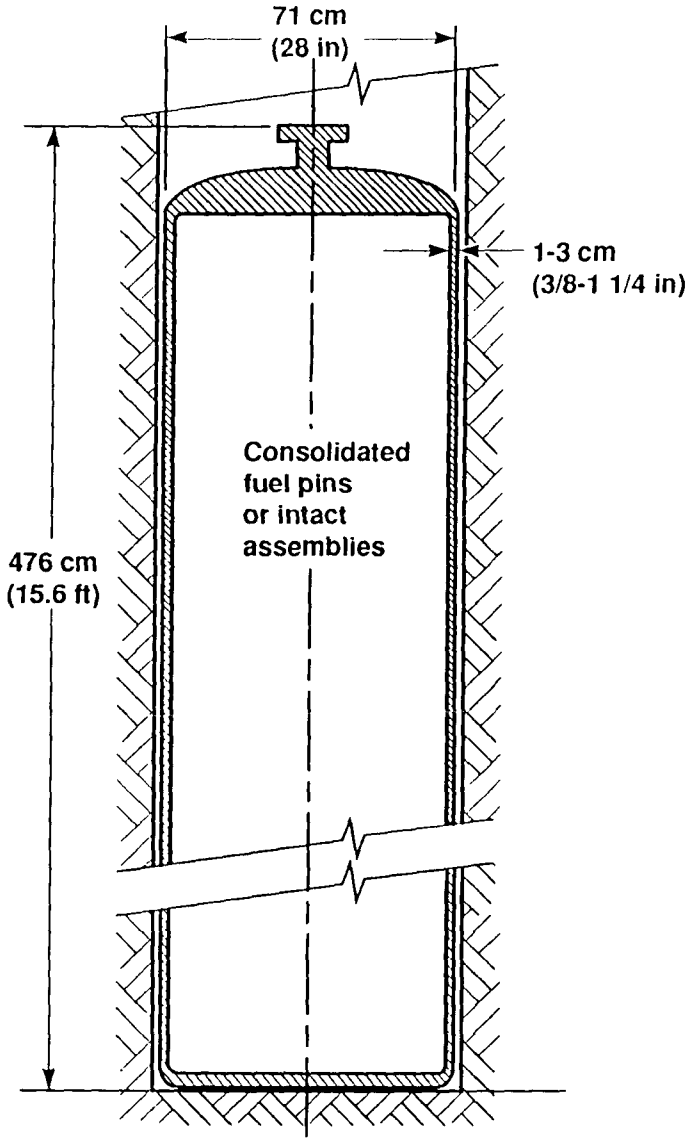

Spent fuel containers
(25,000 to 35,000)

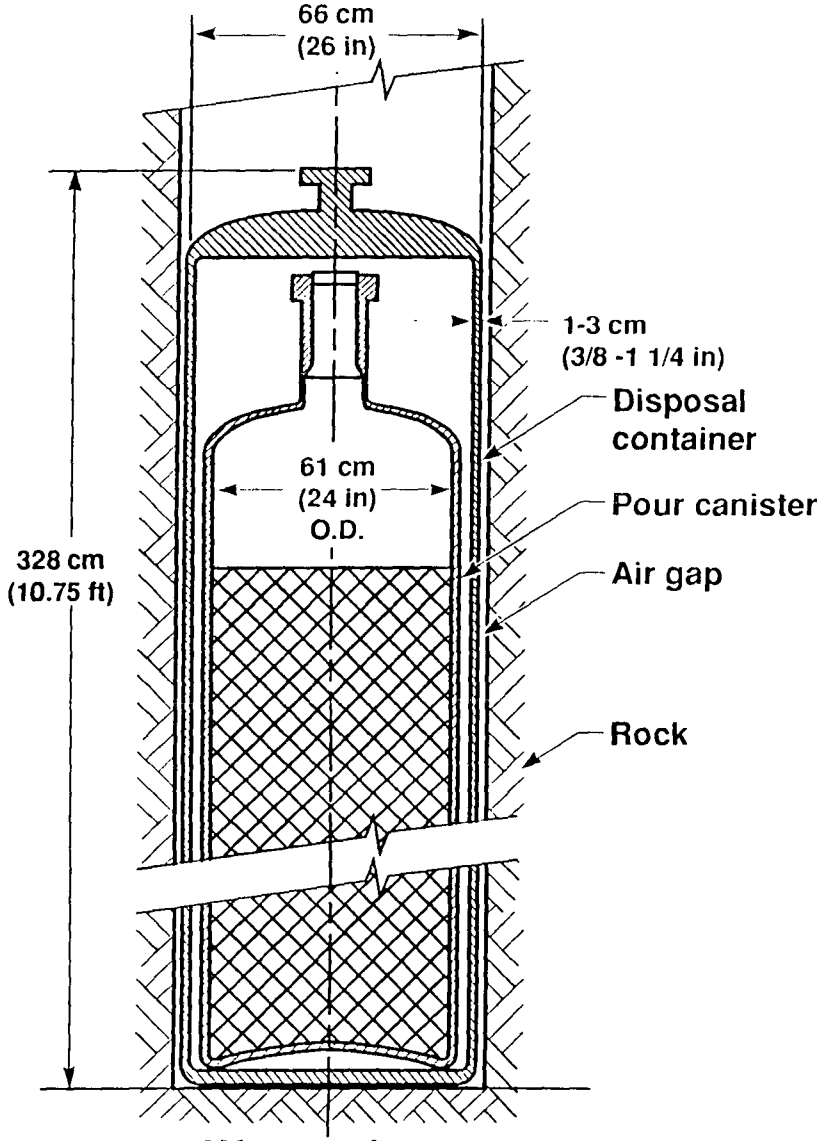

Waste glass
containers (~14,000)

Strategy for Container Material Selection

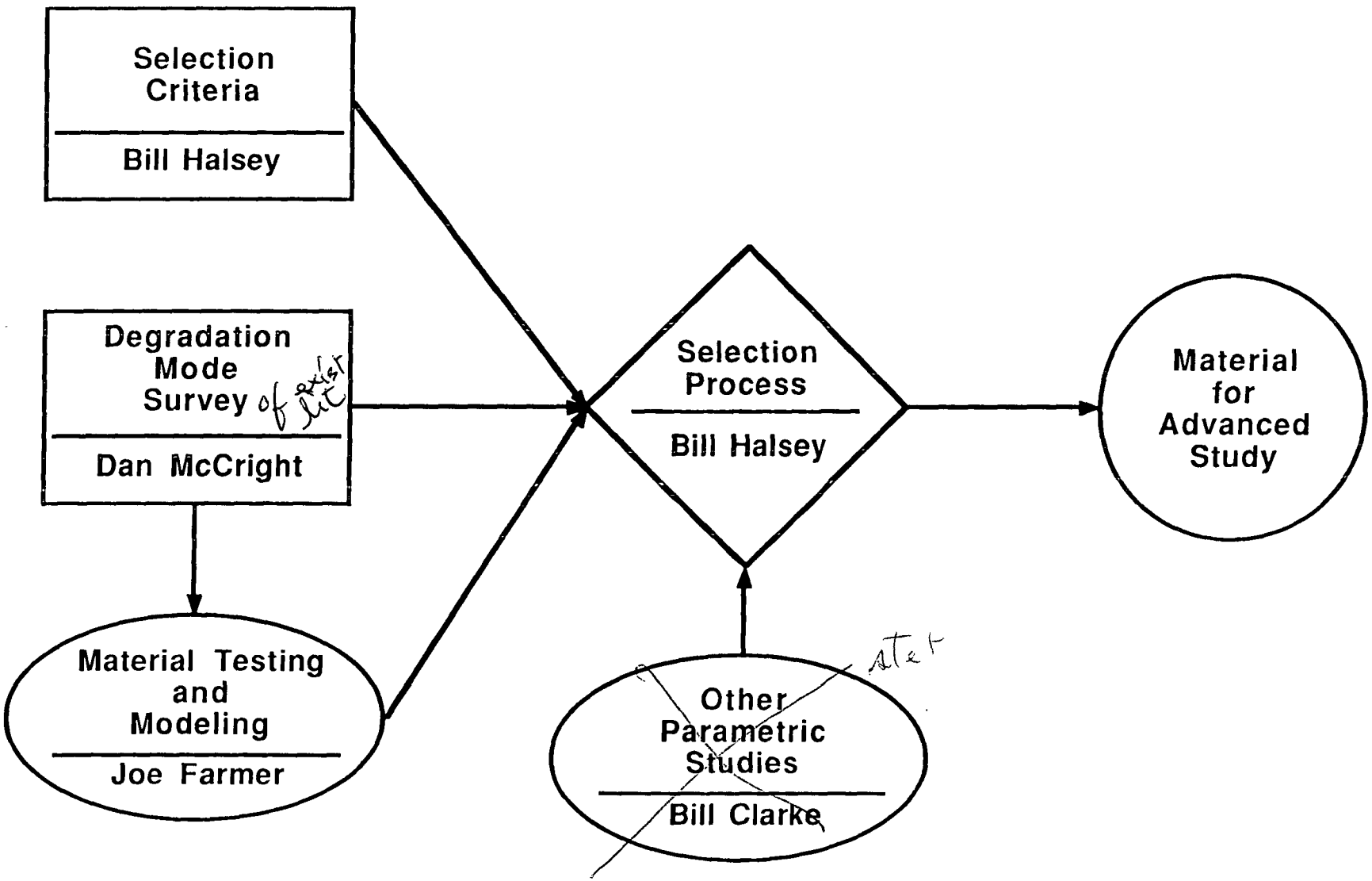

Selection Criteria

- Material independent.
- Derived from functional requirements on container.
- Establish relative weighting of criteria topics.
- Determine if candidate meets minimum requirements.
- Quantitative score to allow comparison of candidates.
- Formal peer review.

Degradation Mode Survey

- Mode identification.
- Survey of literature.
- Mechanisms established.
- Compilation of data.
- Analysis of data.

Work to date

- Needs for additional data determined.

Material Testing and Modeling

- Screening.
- Evaluation / Selection.
- Model development needs. ← Work to date
- Accelerated testing.
- Long term tests.
- Model confirmation.

Test Environments

not started in prog

	ANL Radiation tests	ANL Slow strain rate tests (SSRT)	LLNL Reversing DC tests	LLNL Polarization tests	LLNL Long-term corrosion tests
Fluid Composition	Moist Air	Simulated Well J-13 Water (1x & 20x)	Simulated Well J-13 Water	Simulated Well J-13 Water (vary pH & Cl^-)	Simulated Well J-13 Water
Fluid Phase	Gaseous	Aqueous and Gaseous	Aqueous	Aqueous	Gaseous
Temperature	90, 120, 150, 200°C	90°C	150°C	Below boiling	50, 90, 200°C
Pressure	660 torr plus H_2O vapor pressure	1 atm	4.6 atm	1 atm	1 atm
Radiation	Gamma 7×10^4 rad/h	---	---	---	---

ANL - Argonne National Laboratory
LLNL - Lawrence Livermore National Laboratory

Other Parametric Studies

- Weldability.
- Phase stability.
- Mechanical properties.
- Fabricability and closure.
- Microbiological corrosion.
- Cost.