U.S. DEPARTMENT OF ENERGY
OFFICE OF CIVILIAN RADIOACTIVE WASTE MANAGEMENT

PRESENTATION TO THE NUCLEAR WASTE TECHNICAL REVIEW BOARD

SUBJECT: ENGINEERED BARRIER SYSTEM PERFORMANCE

PRESENTER: DR. ABRAHAM E. VAN LUIK

PRESENTER'S TITLE AND ORGANIZATION: STAFF SCIENTIST, PACIFIC NORTHWEST LABORATORY

PRESENTER'S TELEPHONE NUMBER: (202) 646-5207

MAY 16-17, 1989

U.S. DEPARTMENT OF ENERGY
OFFICE OF CIVILIAN RADIOACTIVE WASTE MANAGEMENT

PRESENTATION TO THE NUCLEAR WASTE TECHNICAL REVIEW BOARD

SUBJECT: ENGINEERED BARRIER SYSTEM PERFORMANCE

PRESENTER: DR. ABRAHAM E. VAN LUIK

PRESENTER'S TITLE AND ORGANIZATION: STAFF SCIENTIST, PACIFIC NORTHWEST LABORATORY

PRESENTER'S TELEPHONE NUMBER: (202) 646-5207

MAY 16-17, 1989

SCOPE OF PRESENTATION

- DESCRIPTION OF THE WASTE PACKAGE/ENGINEERED BARRIER SYSTEM

- THE ENVIRONMENTAL ASSESSMENT'S (EA) ENGINEERED BARRIER SYSTEM PERFORMANCE EVALUATION

- THE SITE CHARACTERIZATION PLAN'S (SCP) ENGINEERED BARRIER SYSTEM PERFORMANCE ASSESSMENT PROGRAM

ENGINEERED BARRIER SYSTEM DEFINITIONS

- ENGINEERED BARRIER SYSTEM (EBS):
  - WASTE PACKAGES
  - THE UNDERGROUND FACILITY
- THE EDGE OF THE EBS IS THE EDGE OF THE EXCAVATION

CONCEPTUAL WASTE PACKAGE DESIGNS FOR HIGH-LEVEL WASTE AND SPENT NUCLEAR FUEL

HIGH-LEVEL WASTE CONTAINER

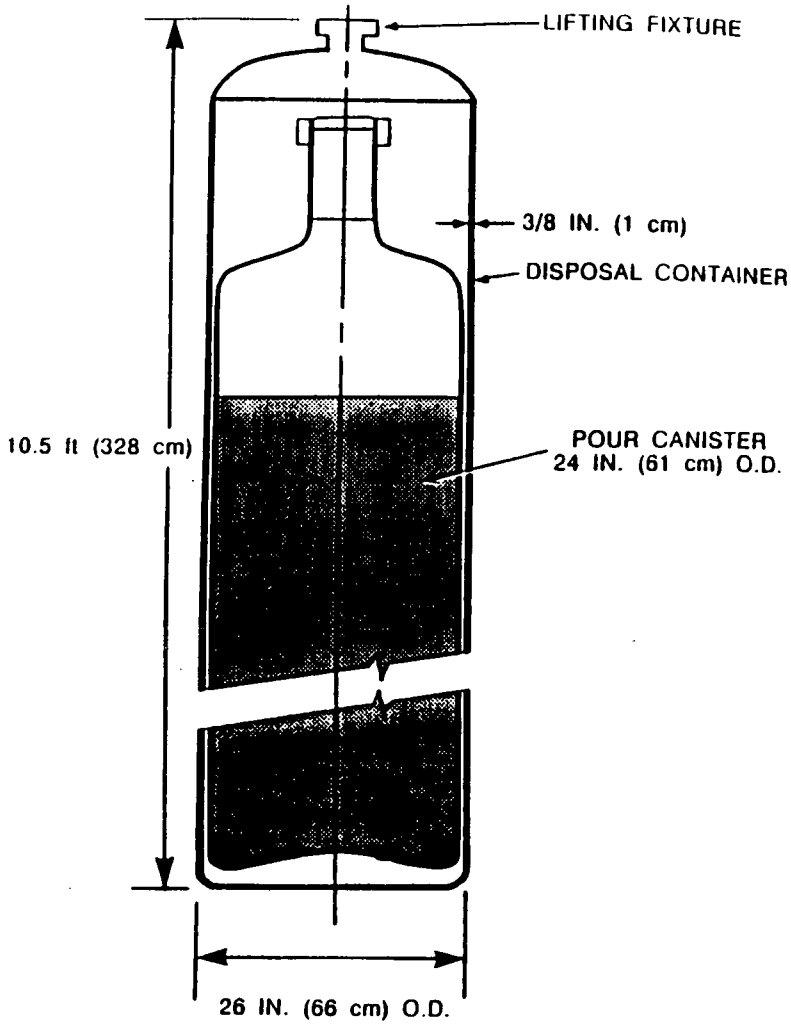

SPENT NUCLEAR FUEL CONTAINER

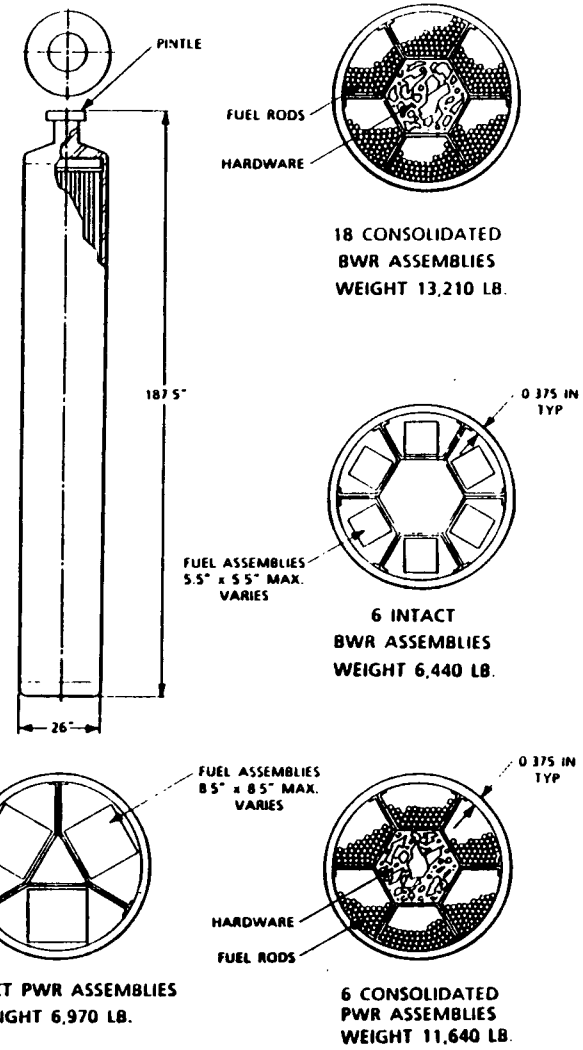

DETAIL OF WASTE PACKAGE EMPLACEMENT OPTIONS

VERTICAL EMPLACEMENT

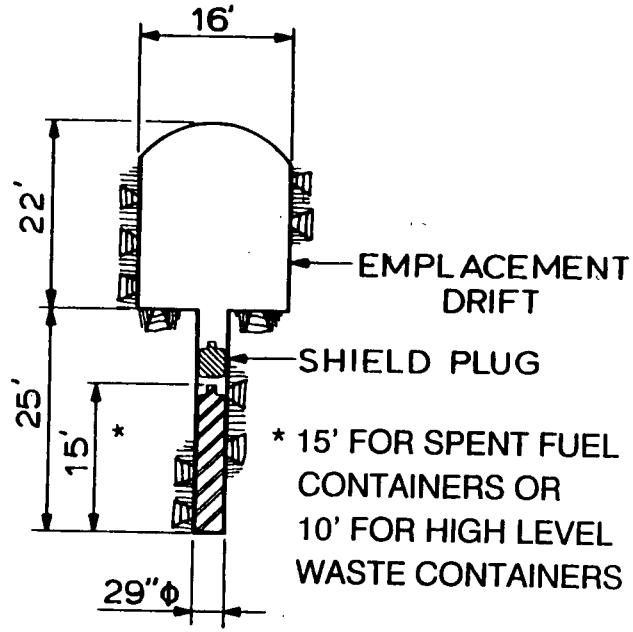

HORIZONTAL EMPLACEMENT

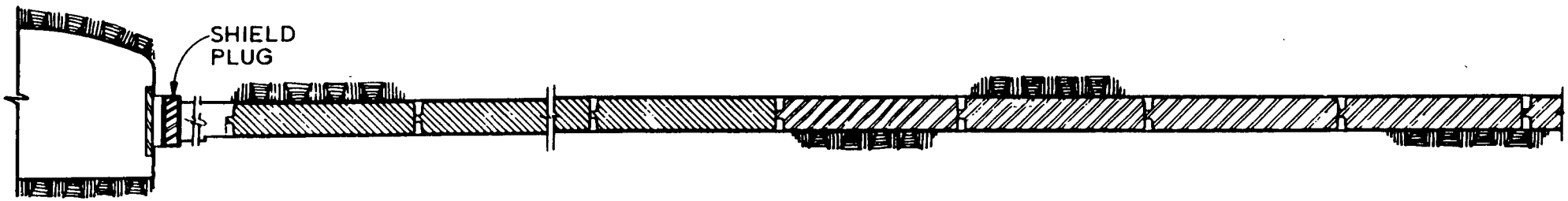

8 DUMMY CONTAINERS

EITHER 14 SPENT FUEL OR 18 HIGH LEVEL WASTE CONTAINERS

SCOPE OF PRESENTATION

- DESCRIPTION OF THE WASTE PACKAGE/ENGINEERED BARRIER SYSTEM

- THE ENVIRONMENTAL ASSESSMENT'S (EA) ENGINEERED BARRIER SYSTEM PERFORMANCE EVALUATION

- THE SITE CHARACTERIZATION PLAN'S (SCP) ENGINEERED BARRIER SYSTEM PERFORMANCE ASSESSMENT PROGRAM

SCP

THE ENVIRONMENTAL ASSESSMENT RELEASE RATE CALCULATION FOR A FAILED SPENT FUEL CONTAINER

$$\dot{M} = FAS$$

$\dot{M}$ - MASS LOSS FROM CONTAINER

F - FLUX OF WATER [5×10^{-4} m^3/m^2-yr]

A - CONTAINER AREA NORMAL TO THE FLUX [0.33 m^2]

S - SOLUBILITY LIMIT OF WASTE MATRIX [5×10^{-2} kg/m^3]

$$\dot{M} = 5 \times 10^{-4} \frac{m}{yr} \bullet 0.33 m^2 \bullet 5 \times 10^{-2} \frac{kg}{m^3} = 8.3 \times 10^{-6} \frac{kg}{yr}$$

FRACTIONAL RELEASE RATE: $\dfrac{\dot{M}}{3.3 \times 10^3 \text{ kg}} = 2.5 \times 10^{-9}/yr$

ASSUMPTIONS AND LIMITATIONS OF THE ENVIRONMENTAL ASSESSMENT EBS PERFORMANCE CALCULATION

- SCENARIO
  - NO RELEASE OCCURS IF NO LIQUID WATER CONTACTED THE WASTE PACKAGE
  - A BOUNDING FLUX RATE OVER AN EFFECTIVE AREA CONTACTED EACH WASTE PACKAGE
  - CONCEPTUAL HYDROLOGIC MODELS ARE NEEDED TO DEFINE THE FLUX AND THE AMOUNT OF LIQUID WATER THAT MAY CONTACT A WASTE PACKAGE
  - GASEOUS RELEASES MAY NEED TO BE MODELED EVEN IF NO LIQUID WATER CONTACTS A WASTE PACKAGE

ASSUMPTIONS AND LIMITATIONS OF ENVIRONMENTAL ASSESSMENT'S EBS PERFORMANCE CALCULATION

(CONTINUED)

- CONTAINER DEGRADATION
  - SINGLE FAILURE TIME USED FOR ALL CONTAINERS (3,000 YEARS)
  - FAILURE TIME ESTIMATE BASED ON EXPERIMENTAL RESULTS FOR ONE CONTAINER METAL AND ONE FAILURE MODE
  - ENVIRONMENTS NEED TO BE DEFINED
  - DEGRADATION MODES FOR REFERENCE AND ALTERNATE METALS NEED TO BE DEFINED FOR ENVIRONMENTS
  - DEGRADATION RATES NEED TO BE DEFINED
  - CONTAINMENT FAILURE TIMES NEED TO BE MODELED

ASSUMPTIONS AND LIMITATIONS OF ENVIRONMENTAL ASSESSMENT EBS PERFORMANCE CALCULATION

(CONTINUED)

- RELEASE RATE
  - A CONGRUENT DISSOLUTION RATE WAS USED
  - OTHER RELEASE PROCESSES NEGLECTED
  - DISSOLUTION RATE BASED ON UNCERTAIN UO_2 SOLUBILITY LIMIT
  - CONTINUOUS HYDROLOGIC PATHWAY ASSUMED
  - ELEVATED TEMPERATURE AND RADIATION FLUX NEGLECTED (ARTIFACT OF 3,000 YEAR CONTAINMENT TIME)

SCOPE OF PRESENTATION

- DESCRIPTION OF THE WASTE PACKAGE/ENGINEERED BARRIER SYSTEM

- THE ENVIRONMENTAL ASSESSMENT'S (EA) ENGINEERED BARRIER SYSTEM PERFORMANCE EVALUATION

- THE SITE CHARACTERIZATION PLAN'S (SCP) ENGINEERED BARRIER SYSTEM PERFORMANCE ASSESSMENT PROGRAM

THE SITE CHARACTERIZATION PROGRAM

A. PERFORMANCE ISSUES

- ISSUE 1.4, CONTAINMENT
- ISSUE 1.5, RELEASE RATE

B. INFORMATION NEEDS

- SITE CHARACTERISTICS
- WASTE PACKAGE ENVIRONMENTS
- MATERIALS PROPERTIES AND BEHAVIORS

C. STUDIES

- IN SITU AND LABORATORY TESTING
- MODEL DEVELOPMENT AND TESTING
- PERFORMANCE AND UNCERTAINTY ANALYSES

SITE CHARACTERIZATION PLAN PERFORMANCE CALCULATION HIERARCHY

- PARTITIONS THE MODELING CONTRIBUTIONS INTO MANAGEABLE MODELING UNITS
  - MODELING UNITS ARE, AT MECHANISTIC/PROCESS LEVELS, LINKED TO SITE AND LABORATORY DATA COLLECTING PROGRAMS
  - ITERATIVE PROCESS USING DATA TO TEST THE MODEL, THEN USING UNCERTAINTY AND SENSITIVITY ANALYSES TO DEFINE FURTHER DATA-GATHERING PRIORITIES, FOCUSES EFFORT ON REDUCTION OF UNCERTAINTIES

ENGINEERED BARRIER SYSTEM PERFORMANCE

CALCULATION HIERARCHY

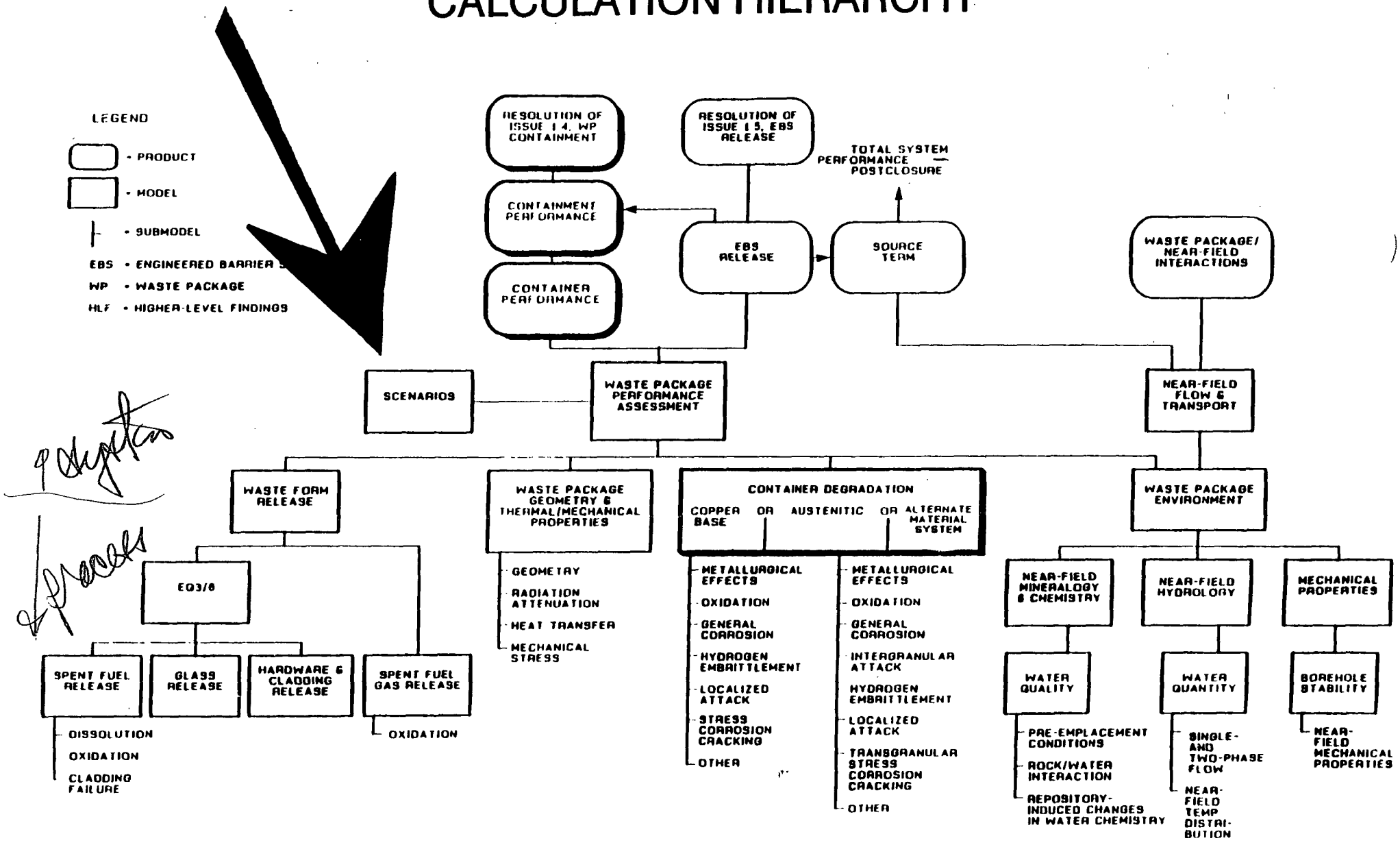

WASTE PACKAGE FAILURE SCENARIOS: "WET" AND "DRY"

- THE EXPECTED CASE IS THE "DRY" CASE; LIQUID WATER WILL NOT CONTACT THE WASTE PACKAGE:
  - UNSATURATED NEAR FIELD ROCK
  - LIKELIHOOD THAT MATRIX FLOW PREDOMINATES
  - WASTE PACKAGE TEMPERATURE EXCEEDS AMBIENT
  - ENGINEERED AIR GAP BREAKS HYDROLOGIC CONTINUITY
- AN UNEXPECTED BUT CREDIBLE CASE IS THE "WET" CASE; THE AIR GAP HAS FAILED, OR THERE IS LIQUID WATER DRIPPING ONTO A WASTE PACKAGE

DRY AND WET CASE RELEASE SCENARIOS

NO LIQUID WATER CONTACTS WASTE PACKAGE (EXPECTED CASE)

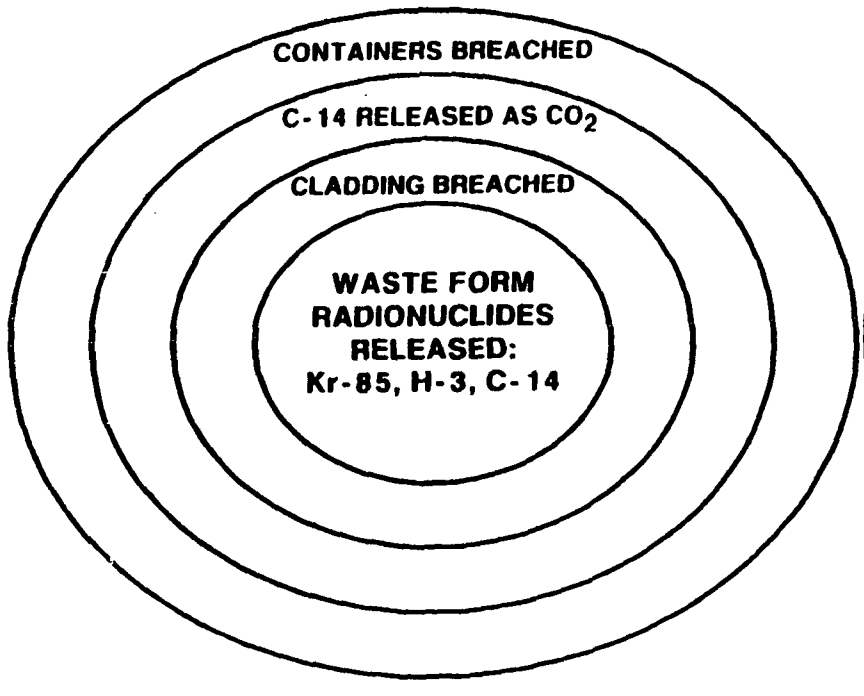

SOME LIQUID WATER CONTACTS WASTE PACKAGE

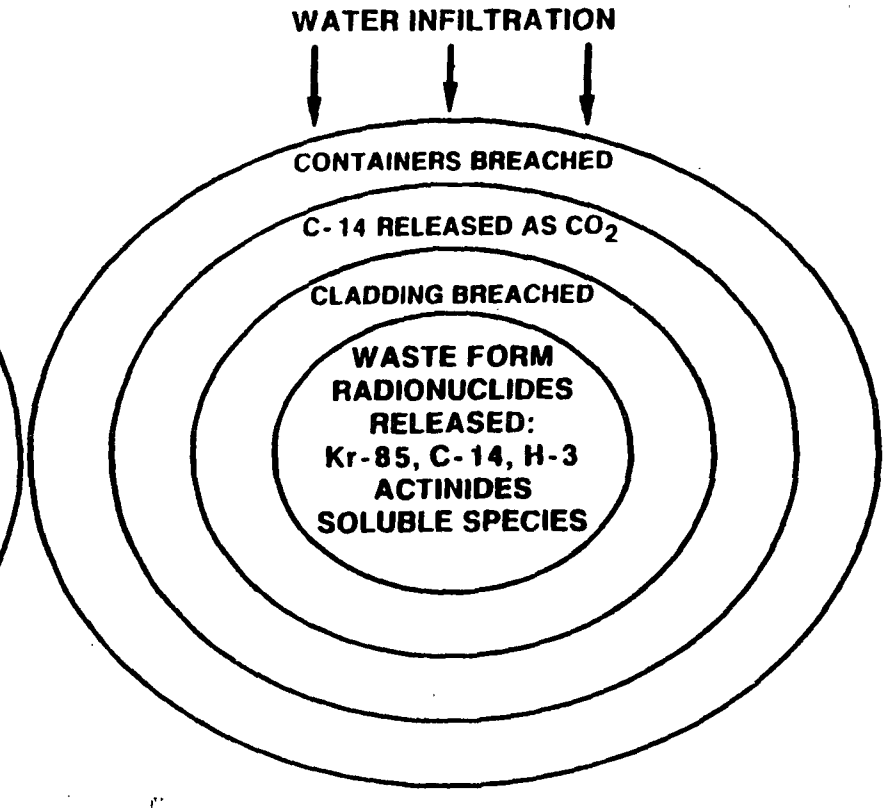

THE AIR GAP IN WASTE PACKAGE EMPLACEMENT: ENHANCING PERFORMANCE BY BREAKING HYDROLOGIC CONTINUITY

Euphonium?

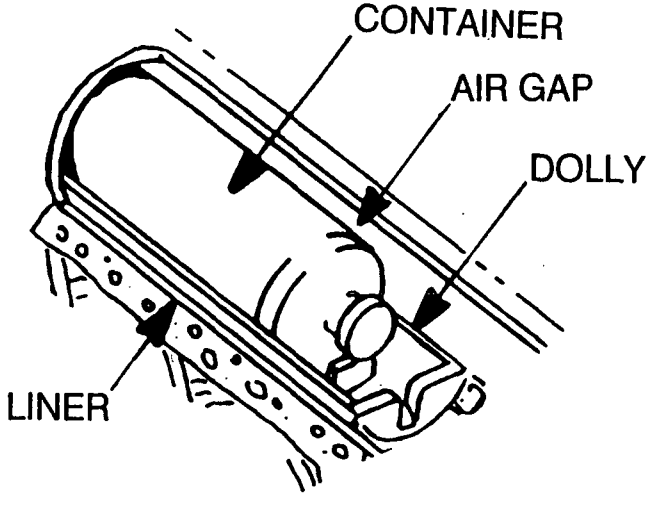

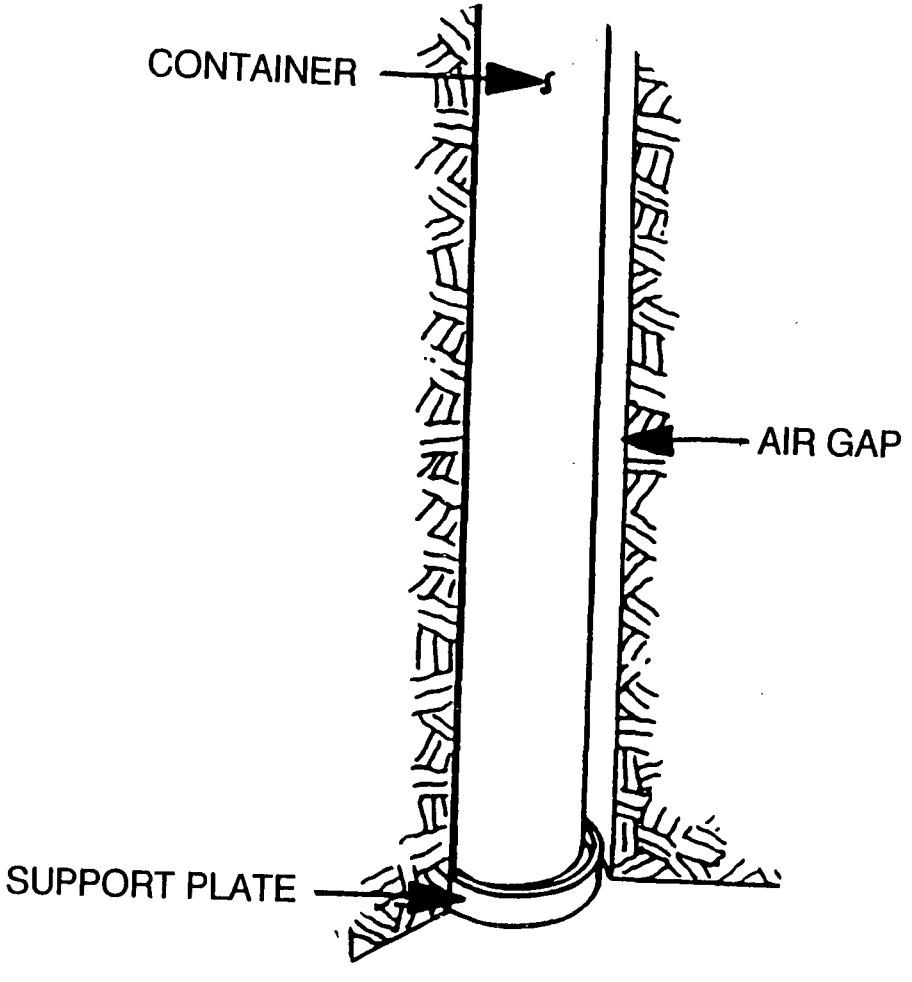

TWO FAILED AIR GAP SCENARIOS

DRIPPING WATER

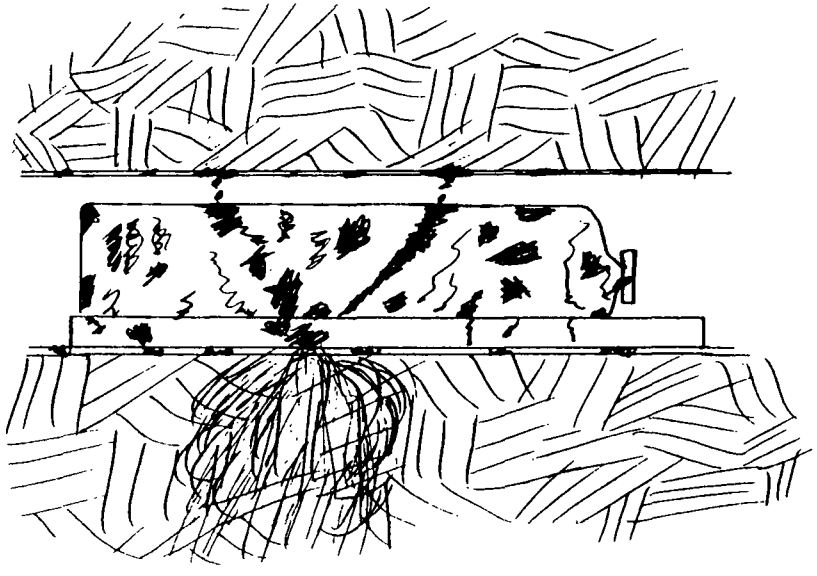

COMPROMISED AIR GAP

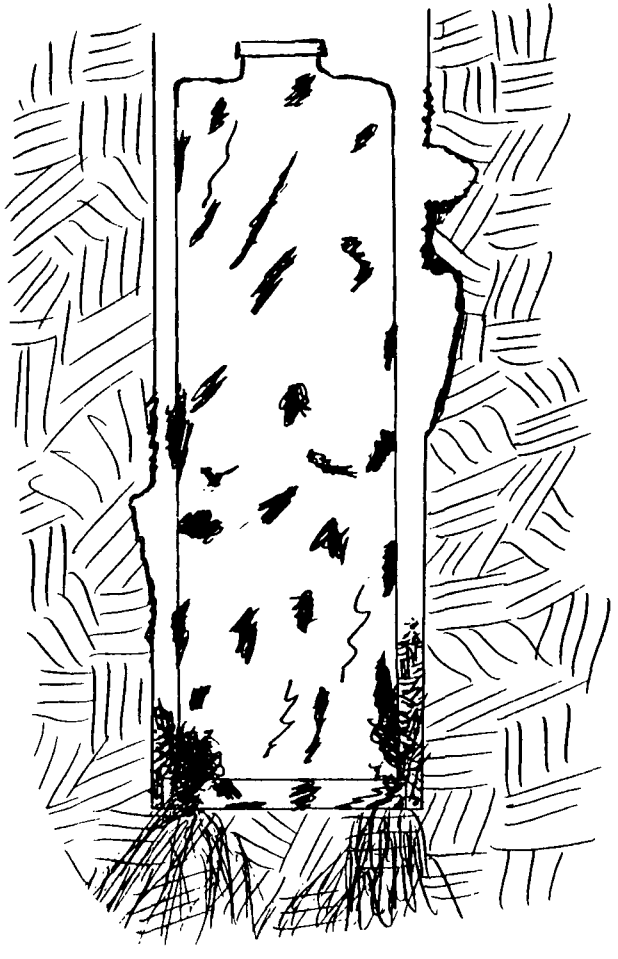

ENGINEERED BARRIER SYSTEM PERFORMANCE

CALCULATION HIERARCHY

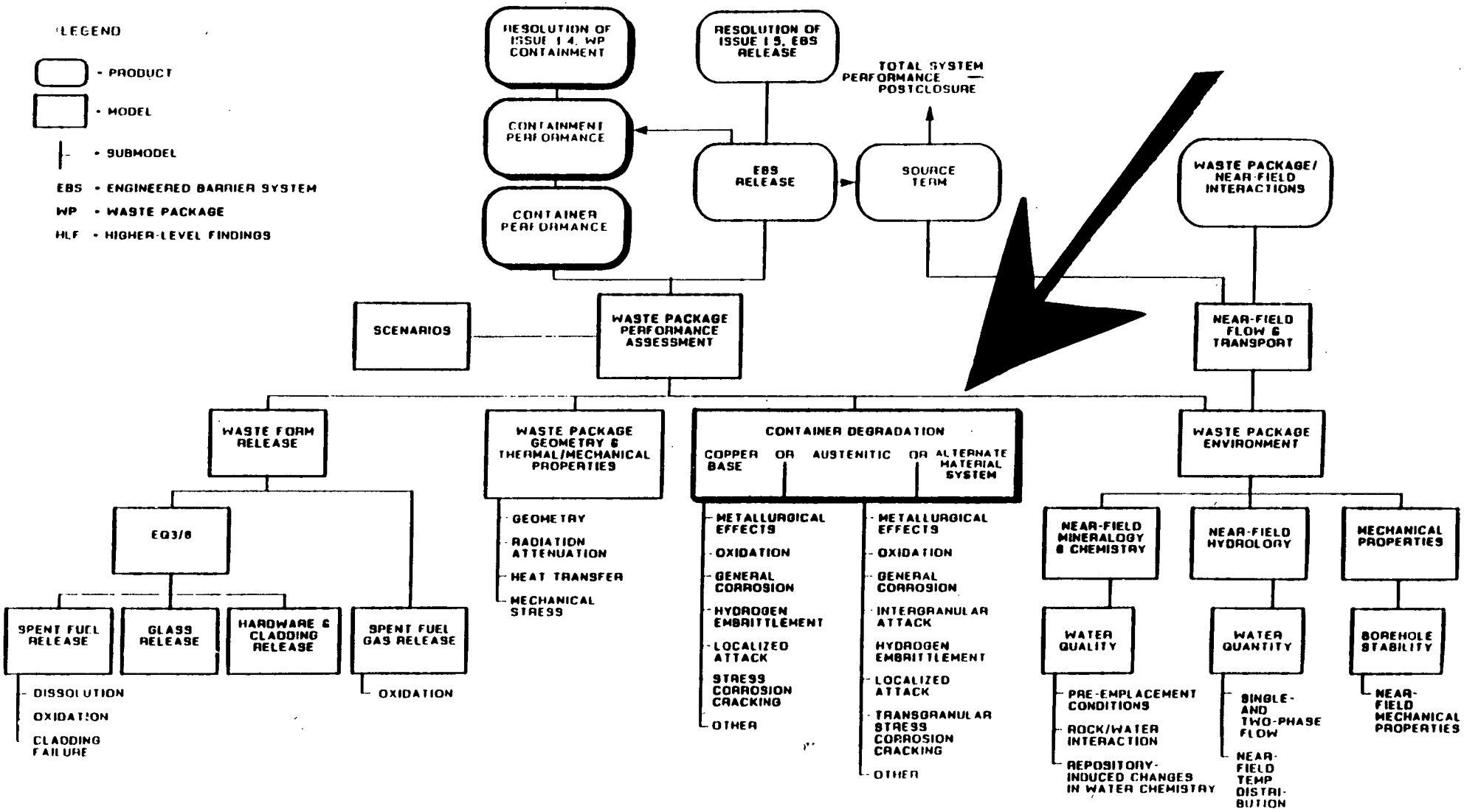

CONTAINER DEGRADATION MODELING PROGRAM

- **SYSTEMATIC LABORATORY TESTING**
  - IDENTIFY DEGRADATION MODES
  - IDENTIFY PHENOMENOLOGY
  - DEVELOP PARAMETRIC DEPENDENCIES (OCCURRENCES AND RATES)
  - IDENTIFY MECHANISMS
- **CONTAINER DEGRADATION MODELING**
  - DEVELOP PRELIMINARY MODELS
  - DEFINE TESTS OF MODELS, CONSIDER ALTERNATE MODELS
  - COMPARE PREDICTIONS TO EXPERIMENTS AND REFINE MODELS
- **WASTE PACKAGE SYSTEM MODELING**
  - COMBINE MODE-SPECIFIC MODELS INTO ONE MODEL FOR ALL MODES
  - PREDICT BEHAVIOR UNDER RANGE(S) OF REPOSITORY CONDITIONS
  - PERFORM SENSITIVITY AND UNCERTAINTY ANALYSIS

ENGINEERED BARRIER SYSTEM PERFORMANCE

CALCULATION HIERARCHY

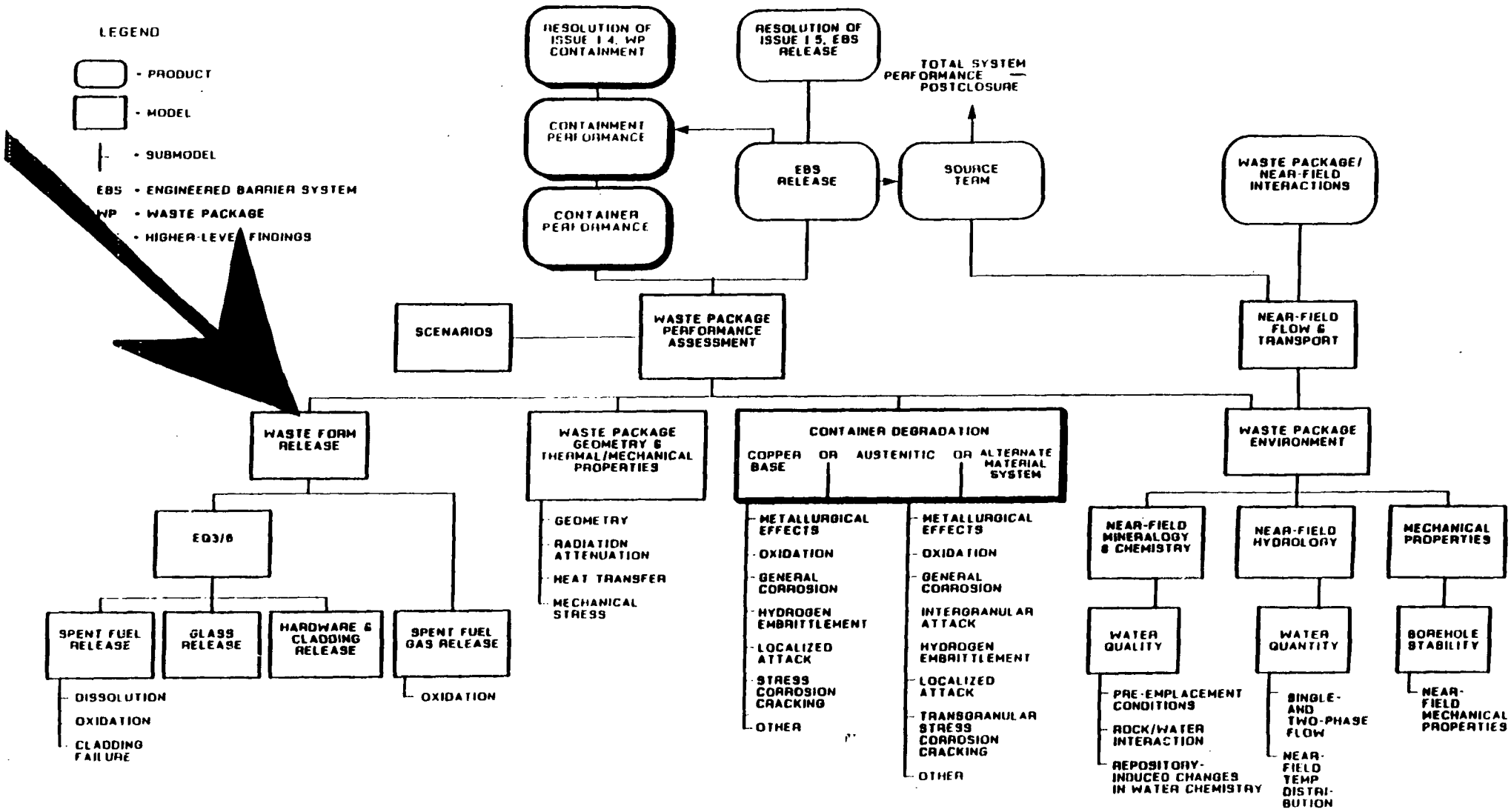

LIQUID PATHWAY RELEASE MODELING

- RAPID RELEASE IS ASSUMED FOR SPENT FUEL GAP AND GRAIN-BOUNDARY RADIONUCLIDE INVENTORIES (A FEW PERCENT OF TOTAL)

- RADIONUCLIDE-SPECIFIC RELEASE MAY BE CALCULATED AS A FUNCTION OF:
  - RADIONUCLIDE CONCENTRATION AT WASTE FORM SURFACE
  - MASS FRACTION IN WASTE FORM
  - FORWARD RATE OF MATRIX DISSOLUTION
  - RADIONUCLIDE RETARDATION
  - FLUX OF GROUNDWATER
  - OTHER FACTORS (RATES OF ALTERATION PHASE FORMATION, COLLOID FORMATION, AND CLADDING DEGRADATION)

- IF GROUNDWATER FLUX IS VERY LOW, DIFFUSION-CONTROLLED FLUX MAY BE CALCULATED AS A FUNCTION OF:
  - RADIONUCLIDE CONCENTRATION AT WASTE FORM SURFACE
  - POROSITY
  - RADIONUCLIDE DIFFUSION COEFFICIENT
  - RADIONUCLIDE RETARDATION

GAS PATHWAY RELEASE MODELING

- THE RADIONUCLIDE GAS FRACTION MAY BE CALCULATED AS A FUNCTION OF:

  - INITIAL GAS INVENTORY
  - RADIONUCLIDE GAS PRODUCTION RATE (e.g. $^{14}CO_2$)
  - GAS ADVECTION VELOCITY
  - RADIONUCLIDE GAS PARTITIONING INTO GROUNDWATER
  - GAS-FILLED POROSITY/TORTUOSITY
  - DIFFUSION COEFFICIENT
  - APERTURE OF CONTAINER/CLADDING FAILURE

- THE PRODUCTION RATE OF A GASEOUS RADIONUCLIDE MAY BE CALCULATED AS A FUNCTION OF:

  - CONTAINER FAILURE RATE
  - RADIONUCLIDE VOLATILITY
  - CLADDING DEGRADATION RATE

ENGINEERED BARRIER SYSTEM PERFORMANCE CALCULATION HIERARCHY

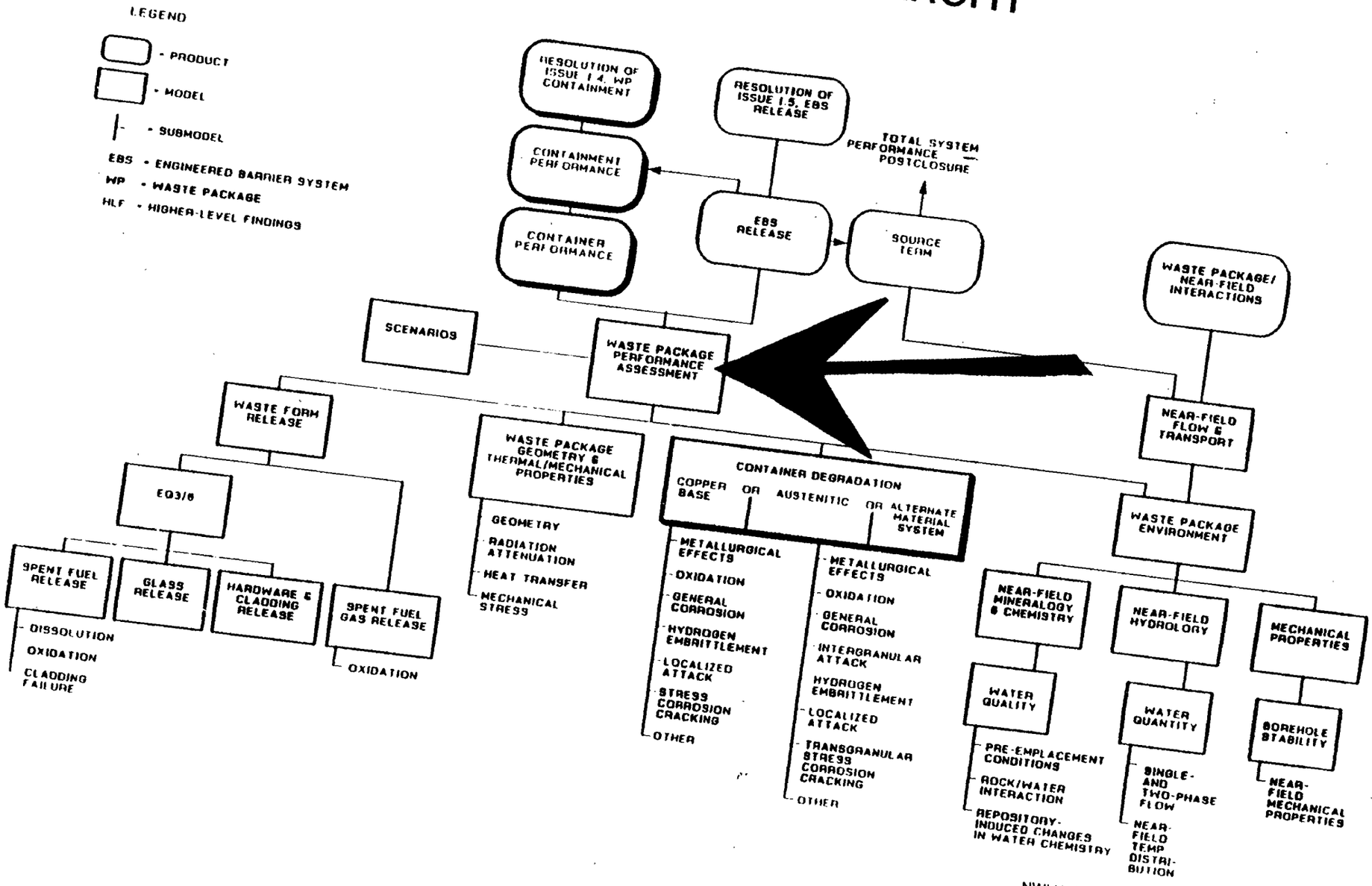

NWLUIK5P.A12/5-16-89

WASTE PACKAGE PERFORMANCE ASSESSMENT PROGRAM

- **WASTE PACKAGE ENVIRONMENTS**
  - SUBMODELS
  - CALCULATIONAL MODELS
  - CALCULATION OF CONDITIONS
- **CONTAINER DEGRADATION**
  - DEGRADATION MODES
  - INITIATING CONDITIONS AND PROCESS RATES
  - PROJECTION OF FAILURE RATES

WASTE PACKAGE PERFORMANCE ASSESSMENT PROGRAM

(CONTINUED)

- ENGINEERED BARRIER SYSTEM RELEASE RATE
  - SUBMODELS
  - MASS TRANSFER MODELS
  - CALCULATION OF RELEASE PERFORMANCE
- INPUT TO TOTAL SYSTEM PERFORMANCE
  - DISRUPTIVE PROCESS AND EVENT SUBMODELS
  - SIMPLIFIED ENGINEERED BARRIER SYSTEM MODEL
  - CALCULATION OF TIME-DEPENDENT CONCENTRATIONS AT HOST-ROCK/EBS INTERFACE

ENGINEERED BARRIER SYSTEM PERFORMANCE MODELING HIERARCHY

- **SYSTEM LEVEL MODELING:**

  eg: PANDORA (DETERMINISTIC); AREST (PROBABILISTIC)

- **PROCESS MODELING**

  eg: ORIGEN2 (WASTE RADIONUCLIDE CONTENT, HEAT AND RADIATION OUTPUT); ADINAT (CONDUCTIVE AND CONVECTIVE HEAT AND MASS TRANSFER); EQ3/EQ6 (SPECIATION/SOLUBILITY AND REACTION PATHS); SPECTROM 31 (ROCK STRESS AND FRACTURE ALTERATIONS)

- **MECHANISTIC MODELING**

  eg: CONTAINER FAILURE MODE MODELS AND WASTE FORM DEGRADATION MODELS AT THE MECHANISTIC LEVEL OF DETAIL, IF POSSIBLE

ENGINEERED BARRIER PERFORMANCE ASSESSMENT ACTIVITIES FOR FY 1989-90

- BENCHMARKING
  - USING PROBLEM SETS CURRENTLY BEING DEFINED
  - USING A PRELIMINARY ANALYSIS COMPLETED IN FY 1988
  - AREST/SYVAC-VAULT COMPARISON
- SENSITIVITY AND UNCERTAINTY ANALYSES TO HELP GUIDE TESTING
- MODEL DEVELOPMENT
- PRELIMINARY ANALYSIS OF GLASS WASTE FORM PERFORMANCE